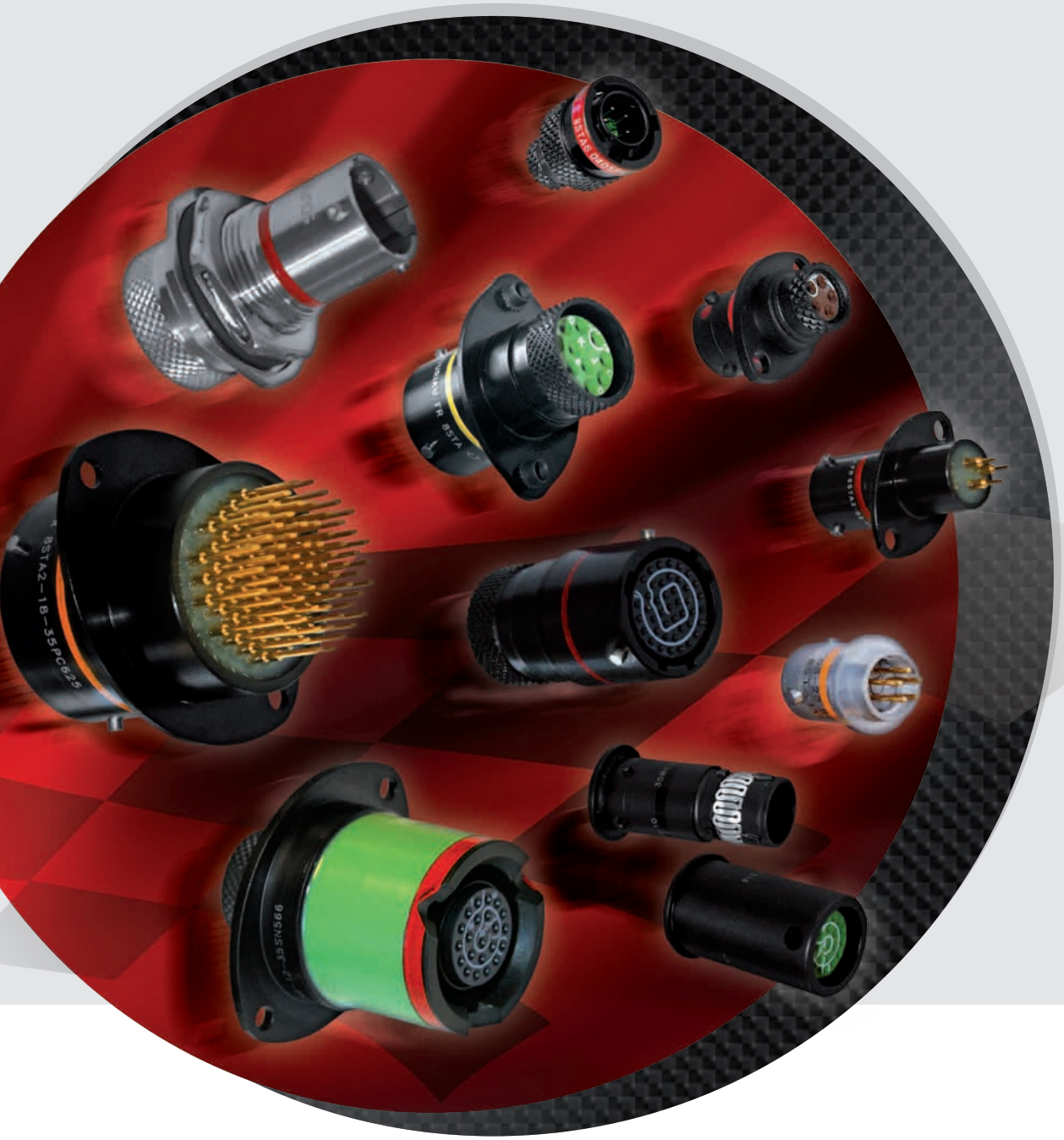

SOURIAU

8STA/8TA Series

Compact Circular Connectors

Derived from MIL-DTL-38999 & JN1003

Esterline
Connection Technologies

8STA/8TA Series

Contents

Overview

- Presentation 06
- Applications 06
- Features & benefits 07
- Product range overview 08
- Contact layouts 10

Standard Series

- 8STA Series shell sizes 02, 04 & 06 16
- 8STA Series shell sizes 08 to 24 19
- Integrated clinch nuts 23
- High density 26
- PCB connectors 28
- Power contacts 32
- 8TA Series 35

Derived Series

- Quick release for steering boss system 40
- Blind mating plug 42
- Through bulkhead 44
- Hermetic shell size 02 46
- Hermetic fuel tank 48
- Fuel immersible 50

Common Section

- Contacts:
  - Crimp contacts 54
  - PCB contacts 55
- Tooling:
  - Crimping tools 56
  - Wire stripping 57
  - Insertion & extraction tools 57
- Accessories:
  - Filler plugs 58
  - Boots 58
  - Shrinkable termination detail 59
  - Nut plates 59
  - Gaskets 59
  - Metal protective caps 60

Range Extension

- 209 Series 64
- High power contact 64
- Composite connectors 65
- micro38999 - 8BA Series 65
- *micro*Comp® Series 66
- UTS Series 66

© 2013 - SOURIAU

8STA Series

8STA/8TA Series

Overview

Presentation 06

Applications 06

Features & benefits 07

Product range overview 08

Contact layouts 10

8STA/8TA Series
Overview

Presentation

Compact Circular Connectors

8STA/8TA Series

- **8STA** & **8TA** circular connectors are derived from international military specifications **MIL-DTL-38999** & **JN1003**, and are designed to withstand high levels of shock & vibration in harsh environments.
- One of the primary objectives with this product family, is to push the boundaries in terms of **miniaturization** and **weight reduction**, as demonstrated by the introduction of the worlds smallest, & now most popular connector of this type: 8STA **size 02**.
- Continuing on with this theme, several new products can be found in this latest catalogue, including chassis mounted receptacles with integrated nuts, eliminating the need for nut plates, lightweight cable receptacles, hermetic size 02 connectors and High Density 8STA with pin counts normally associated with much larger connectors.
- **8STA** & **8TA** Series connectors are recommended for **harsh environment** applications where size and weight should be minimized.

Applications

© 2013 - SOURIAU

8STA/8TA Series
Overview

Features & benefits

Integrated Backshell

- Space & weight saving.
- Cost effective.
- Right angle & straight version available.
- Easy to implement with heat shrink boot.

Environmental Resistant

- IP67 waterproof.
- Grommet and interfacial seal as MilAero products.
- 500 mating/unmating endurance.
- Withstands most of Motorsport fluids.

8STA/8TA Series

- Compact circular connector.
- Derived from MIL-DTL-38999 & JN1003.
- Many derived products ! See page 39.

A Complete Range

- Crimp, PC tails, coax, triax, quadrax, power & thermocouple contacts.
- 12 shell sizes: from size 02, up to size 24.
- More than 70 contact layouts.

User Friendly

- Quick bayonet locking: 1/3 turn to mate.
- Secure connection with audible clic.
- Visual color indication when mated.
- Up to 7 color coded keyway orientations.

© 2013 - SOURIAU

Product range overview

Standard Series

8STA Series shell sizes 02 to 06
See page 16

8STA Series shell sizes 08 to 24
See page 19

Integrated Clinch Nuts
See page 23

High Density NEW
See page 26

PC Tail Contacts
See page 28

Power Contacts
See page 32

8TA Series
See page 35

© 2013 - SOURIAU

8STA/8TA Series
Overview

Derived Series

Steering Boss System
See page 40

Blind Mating Plug
See page 42

Through Bulkhead
See page 44

Hermetic Shell Size 02
See page 46

Hermetic Fuel Tank
See page 48

Fuel Immersible
See page 50

Tooling & Accessories

- A full range of tooling and accessories available:
  - . Nut plates
  - . Gaskets
  - . Metal protective caps
  - . Filler plugs
  - . Crimping tools
  - . Insertion & extraction tools
  - . ...

Common Section
page 53

Contact layouts (viewed from front face of male insulator)

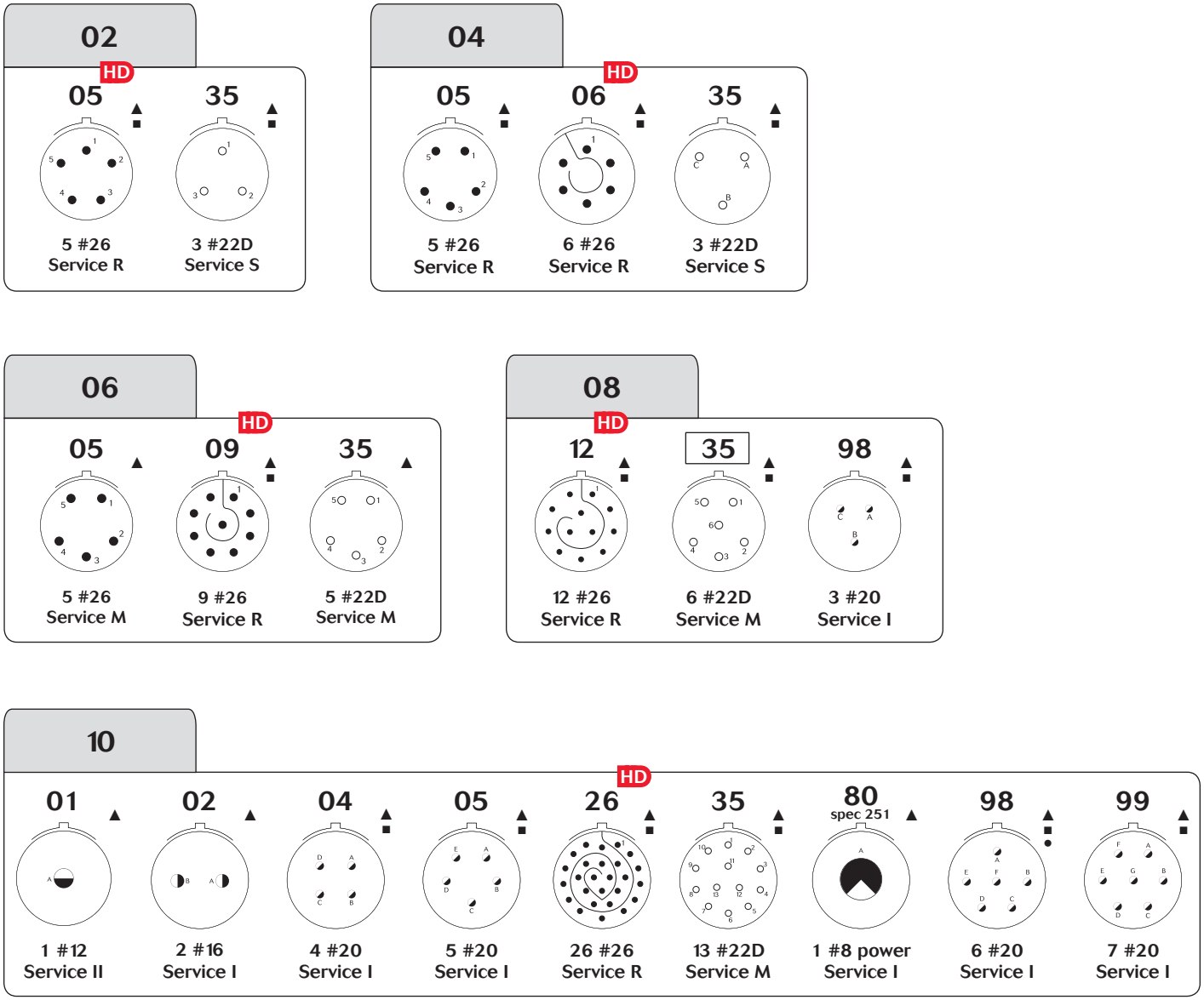

● Contact #26	◐ Contact #16	▲ Crimp contact layouts	HD High Density layouts
○ Contact #22D	◒ Contact #12	■ PC tail contact layouts	▭ For both 8STA & 8TA, all others for 8STA only
◪ Contact #20	◓ Contact #8 Power	• Solder cup contact layouts	

© 2013 - SOURIAU

8STA/8TA Series
Overview

12

01 spec 261 ▲	03 ▲	04 ▲ ●	08 ▲ ■	26 ▲	35 ▲ ■	43 HD ▲ ■	98 ▲ ■ ●
1 #4 power Service M	3 #16 Service I	4 #16 Service I	8 #20 Service I	6 #22D 2#12 Service M	22 #22D Service M	43 #26 Service R	10 #20 Service I

14

05 ▲	15 ▲	18 ▲ ■	19 ▲ ■	35 ▲ ■	97 ▲ ●
5 #16 Service II	14 #20 1 #16 Service I	18 #20 Service I	19 #20 Service I	37 #22D Service M	8 #20 4 #16 Service I

16

02 spec 251 ▲	06 ▲	08 ▲	26 ▲ ■	35 ▲ ■	75 spec 251 ▲	99 ▲
1 #8 power 38 #22D Service N	6 #12 Service I	8 #16 Service II	26 #20 Service I	55 #22D Service M	2 #8 power Service M	2 #16 21 #20 Service I

● Contact #26	◐ Contact #16	● Contact #4 Power	▲ Crimp contact layouts	HD High Density layouts
○ Contact #22D	◒ Contact #12		■ PC tail contact layouts	
◪ Contact #20	◓ Contact #8 Power		● Solder cup contact layouts	

© 2013 - SOURIAU

8STA/8TA Series
Overview

18

11 ▲	18 spec 251 ▲	28 ▲	32 ▲ ■	35 ▲ ■
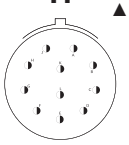	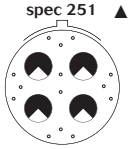	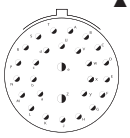	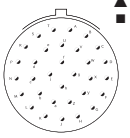	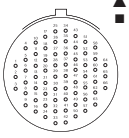
11 #16 Service II	14 #22D 4 #8 power Service M	26 #20 2 #16 Service I	32 #20 Service I	66 #22D Service M

20

11 ▲	16 ▲	35 ▲ ■	39 ▲	41 ▲ ■	48 ▲	77 spec 251 ▲
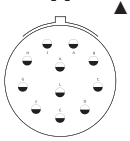	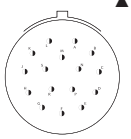	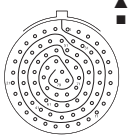	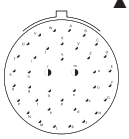	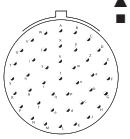	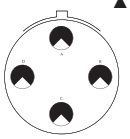	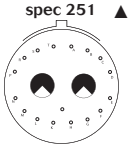
11 #12 Service I	16 #16 Service II	79 #22D Service M	37 #20 2 #16 Service I	41 #20 Service I	4 #8 power Service I	17 #22D 2 #8 power Service M

22

21 ▲	32 ▲	35 ▲ ■	53 ▲ ■	54 ▲	55 ▲ ■
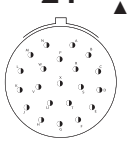	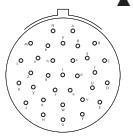	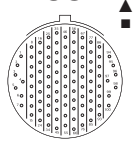	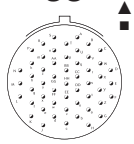	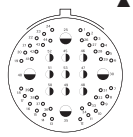	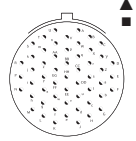
21 #16 Service II	32 #20 Service I	100 #22D Service M	53 #20 Service I	40 #22D 9 #16 4 #12 Service M	55 #20 Service I

○ Contact #22D	◒ Contact #12	▲ Crimp contact layouts
◪ Contact #20	◠ Contact #8 Power	■ PC tail contact layouts
◑ Contact #16		

© 2013 - SOURIAU

24

04 ▲

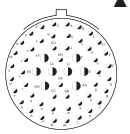

48 #20
8 #16
Service I

07 spec 251 ▲

2 #8 power
97 #22D
Service M

19 ▲

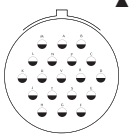

19 #12
Service I

24 ▲

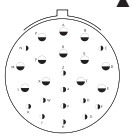

12 #12
12 #16
Service II

29 ▲

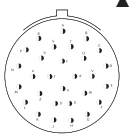

29 #16
Service I

35 ▲ ■

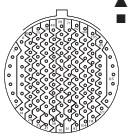

128 #22D
Service M

37 ▲

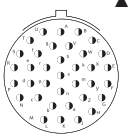

37 #16
Service I

41 spec 251 ▲

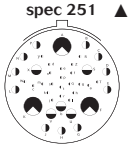

22 #22D
3#20, 11#16
2#12, 3#8 power
Service N

43 ▲

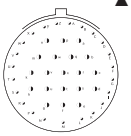

20 #16
23 #20
Service I

44 ▲

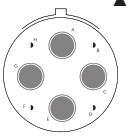

4 #4 power
4 #16
Service I

46 spec 251 ▲

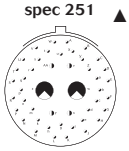

2 #8 power
4 #16
40 #20
Service I

61 ▲ ■

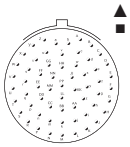

61 #20
Service I

Test voltage rating (Vrms)

Service	Sea level	at 21 000 m
R	400	N/A
S	1000	N/A
M	1300	800
N	1000	600
I	1800	1000
II	2300	1000

○ Contact #22D
◒ Contact #12
▲ Crimp contact layouts
◪ Contact #20
◓ Contact #8 Power
■ PC tail contact layouts
◑ Contact #16
● Contact #4 Power

© 2013 - SOURIAU

8STA Series

8STA/8TA Series

Standard Series

- 8STA Series - Shell sizes 02, 04 & 06 16
- 8STA Series - Shell sizes 08 to 24 19
- 8STA Series - Integrated clinch nuts 23
- 8STA Series - High density 26
- 8STA Series - PCB connectors 28
- 8STA Series - Power contacts 32
- 8TA Series - Compact low profile 35

8STA Series
Shell Sizes 02, 04 & 06

Description

- Size 02: the smallest circular connector with removable contacts #26
- Ultra compact design & very lightweight connector
- Rugged aluminium body to ensure long service life in the harshest environment
- Positive locking mechanism with locked colour indicators
- Scoop proof
- 7 color-coded keyway orientations
- Boot termination feature
- PCB option available
- Conductive black zinc or nickel plating

Technical features

Mechanical

- **Shell:**
  Aluminium alloy
  Glass fibre loaded plastic - composite (shell size 06 only)
- **Shell plating:**
  Conductive black zinc (standard)
  Nickel (F)
  Composite (X)
- **Insulator:**
  Thermoplastic
- **Grommet & seal:**
  Liquid silicone rubber
- **Contact:**
  Copper alloy
- **Contact plating:**
  Gold
- **Endurance:**
  500 mating cycles
- **Shock:**
  300g for 3ms and EIA-364-27
- **Vibration:**
  147m/s2, 10 to 2000Hz
- **Contact retention:**
  35 N (size 26)
  45 N (size 22D)

Climatic

- **Operating temperature:**
  -55°C to +175°C
- **Sealing mated connectors:**
  IP67 (1 metre for 30 min minimum)
- **Salt spray:**
  Aluminum: 48 hours
  Composite: 500 hours

Electrical

- **Test voltage:**
  Size 26: 400 Vrms
  Size 22D: 1000 Vrms (shell size 02 & 04)
  1300 Vrms (shell size 06)
- **Contact resistance:**
  Size 26: <16 mΩ
  Size 22D: <14.6 mΩ
- **Insultation resitance:**
  ≥ 5000mΩ @ 400Vdc / Size 26
  ≥ 5000mΩ @ 500Vdc / Size 22D
- **Contact rating:**
  Size 26: 3 Amp
  Size 22D: 5 Amp

© 2013 - SOURIAU

8STA Series
Shell Sizes 02, 04 & 06

Ordering information

Basic series	8STA	0		04	05	P	N

Shell type
- **0:** Oval flange receptacle
- **1:** In-line receptacle
- **2:** Oval flange receptacle with PCB contacts
- **6:** Plug
- **7:** Jam nut receptacle (consult us)

Plating
- **None:** Standard version
- **F:** Nickel version
- **X:** Composite version (shell size 06 only)

Shell size
- **02, 04, 06**

Contact layout
- See pages 10 to 13

Type of contact
- **P:** Pin
- **S:** Socket

Orientation
- **N:** Red / **A:** Yellow / **B:** Blue / **C:** Orange / **D:** Green / **E:** Grey (shell size 02 only) / **U:** Universal (aluminum alloy only)

Specification
- **None:** Standard version
- **499:** Integrated nut on the flange - M2 insert (only for shell style 0 & 2) - *for more details, please see page 23*
- **528:** Integrated nut on the flange - M2.5 insert (only for shell style 0 & 2) - *for more details, please see page 23*
- **562:** PCB version (jam nut shell size 02 only)
- **022:** Fuel immersible version (shell sizes 04 & 06 only) - *for more details, please see page 50*

Dimensions

Plug

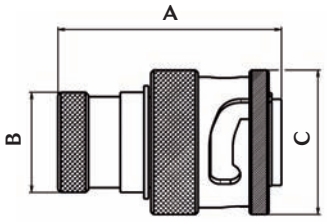

Shell size	A	Ø B	Ø C
02	17.50	7.2	10.4
04	$18.3^{\pm0.2}$	$8.5^{\pm0.1}$	$13.4^{\pm0.1}$
06	21.95/22.2	10.1/10.35	$15.05^{\pm0.2}$

In-line receptacle

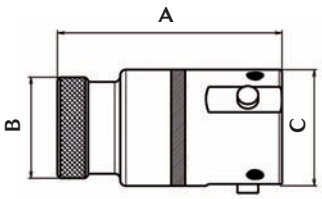

Shell size	A	Ø B	Ø C
02	17.50	7.2	8.3
04	$18.1^{\pm0.2}$	$8.5^{\pm0.1}$	$10^{\pm0.2}$
06	22.95/23.2	10.1/10.35	11.5/11.65

Note: All dimensions are in millimeters (mm)

© 2013 - SOURIAU

8STA Series
Shell Sizes 02, 04 & 06

Oval flange receptacle

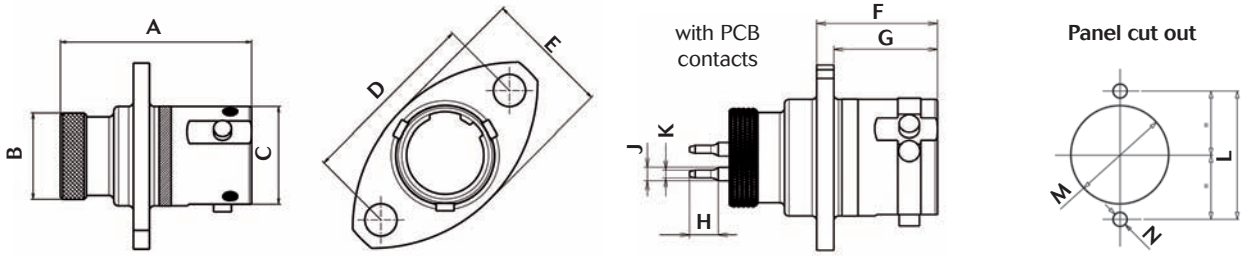

Shell size	A	Ø B	Ø C	D	E	F	G	H
02	17.5	7.2	8.3	15.3	-	10	-	2.45/2.55
04	17.9/18.3	8.4/8.6	9.8/10.2	16/16.4	12.8/13.2	10.4/10.7	8.8/9.2	2.5
06	22.9/23.2	10.1/10.3	11.5/11.6	17.8/18.2	14.7/14.9	12.6/12.9	10.7/10.8	3.9/4.1

Shell size	J		K		L	Ø M	Ø N
	#22D	#26	#22D	#26			
02	1.17/1.24	0.95/1.15	0.64/0.69	0.49/0.54	$15.3^{\pm0.2}$	$9.3^{\pm0.1}$	$3.1^{\pm0.2}$
04	1.19/1.24	1.1/1.15	0.64/0.69	0.49/0.54	$16.2^{\pm0.2}$	$12^{\pm0.1}$	$3.1^{\pm0.2}$
06	1.19/1.24	1.1/1.15	0.64/0.69	0.49/0.54	$18^{\pm0.2}$	$13^{\pm0.1}$	$3.1^{\pm0.2}$

Jam nut receptacle (shell size 04)

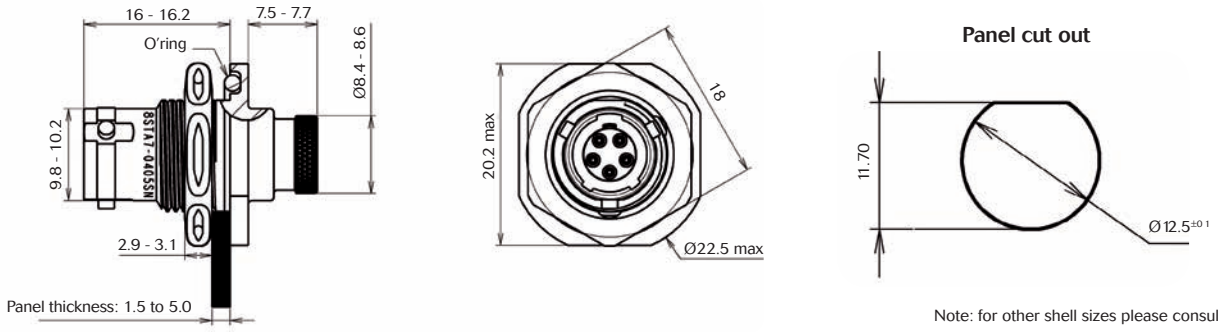

Note: for other shell sizes please consult us.

Orientation

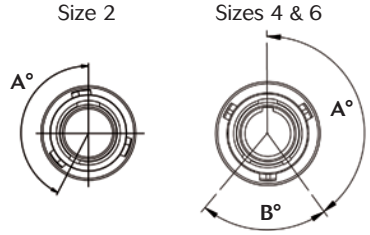

View from front face of plug.

Key positions		N	A	B	C	D	E	U
Shell size 02	Angles A°	153°	51°	102°	204°	255°	306°	None
Shell sizes 04 & 06	Angles A°	145°	130°	110°	155°	90°	-	None
	Angles B°	75°	120°	120°	115°	115°	-	None
Color band		Red	Yellow	Blue	Orange	Green	Grey	None

Note: All dimensions are in millimeters (mm)

© 2013 - SOURIAU

8STA Series
Shell Sizes 08 to 24

Description

- 5 shell styles:
- 100% scoop-proof
- EMI-RFI shielding and shell to shell continuity is provided by conductive plating and integral grounding ring fitting to the plug
- Environment sealing from interfacial seal and rear grommet (sealing IP67)
- Positive locking mechanism with locked colour indicator
- 6 color-coded keyway orientations
- Conductive black zinc or nickel plating

Technical features

Mechanical

- **Shell:**
  Aluminium alloy
- **Shell plating:**
  Conductive black zinc
  Nickel (F)
- **Insulator:**
  Thermoplastic
- **Grommet & seal:**
  Liquid silicone rubber
- **Contact:**
  Copper alloy
- **Contact plating:**
  Gold
- **Endurance:**
  500 mating cycles
- **Shock:**
  300g for 3ms and EIA-364-27
- **Vibration:**
  147m/s2, 10 to 2000Hz
- **Contact retention:**

Size 22D:	45 N
Size 20:	60N
Size 16:	100 N
Size 12:	100 N
Size 8:	110 N
Size 4:	200 N

Climatic

- **Operating temperature:**
  -55°C to +175°C
- **Sealing mated connectors:**
  IP67 (1 metre for 30 min minimum)
- **Salt spray:**
  Aluminum: 48 hours

Electrical

- **Test voltage:**

Service	M	N	I	II
Sea level	1300	1000	1800	2300

- **Contact resistance:**

Size 22D:	14.6 mΩ
Size 20:	7.3 mΩ
Size 16:	3.8 mΩ
Size 12:	3.5 mΩ
Size 8:	3 mΩ
Size 4:	2 mΩ

- **Insultation resitance:**
  ≥ 5000 mΩ (at 500 Vdc)
- **Contact rating:**

Size 22D:	5 A
Size 20:	7.5 A
Size 16:	13 A
Size 12:	23 A
Size 8:	45 A
Size 4:	80 A

- **Shell continuity:**
  ≤10 mΩ

© 2013 - SOURIAU

Ordering information

Basic series	8STA	0		10	35	P	N

Shell type
- **0:** Oval flange receptacle (for front or rear mounting)
- **1:** In-line receptacle
- **2:** Oval flange receptacle with PCB contacts
- **6:** Plug
- **7:** Jam nut receptacle

Plating
- **None:** Standard version
- **F:** Nickel version

Shell size: 08 - 10 - 12 - 14 - 16 - 18 - 20 - 22 - 24

Contact layout: See pages 10 to 13

Type of contact
- **P:** Pin
- **S:** Socket

Orientation
- **N:** Red / **A:** Yellow / **B:** Blue / **C:** Orange / **D:** Green / **U:** Universal

Specification
- **None:** Standard version
- **499:** Integrated nut on the flange - M2 insert (only for shell style 0 & 2) - *for more details, please see page 23*
- **528:** Integrated nut on the flange - M2.5 insert (only for shell style 0 & 2) - *for more details, please see page 23*
- **523:** Lighweight In-line receptacle (shell type 1)
- **022:** Fuel immersible version - *for more details, please see page 50*

Dimensions

Oval flange receptacle

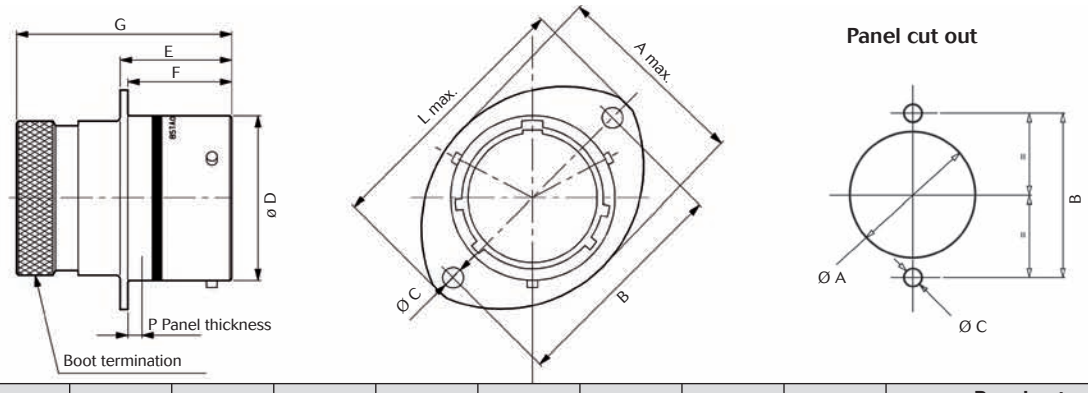

Shell size	A max.	B ±0.20	ØC $^{0}_{+0.1}$	ØD $^{+0.2}_{-0.13}$	E $^{0}_{+0.15}$	F $^{0}_{-0.13}$	G max.	L max.	P max.	Panel cut out ØA ±0.10	Panel cut out B ±0.20	Panel cut out ØC ±0.20
08	16.50	21.40	3.20	12.00	17.21	16.05	33.50	27.20	3.00	14.50	21.40	3.60
10	19.50	25.90		15.00				32.00		17.40	25.90	
12	24.00	29.10		19.05				35.20		21.90	29.10	
14	27.00	32.50		22.22				38.40		25.00	32.50	
16	30.30	34.80		25.40				41.00		28.20	34.80	
18	33.70	38.20		28.57				44.70		31.40	38.20	
20	37.00	41.60		31.75		15.29		47.90		34.60	41.60	
22	40.40	45.00		34.90				51.00		37.60	45.00	
24	43.40	49.50	3.77	38.10	18.20			55.80		41.00	49.50	4.10

Note: All dimensions are in millimeters (mm)

© 2013 - SOURIAU

Jam nut receptacle

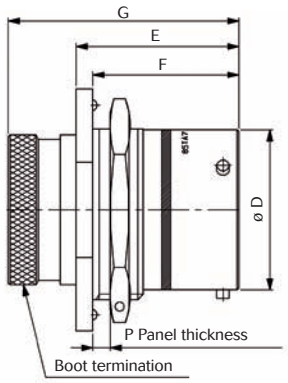

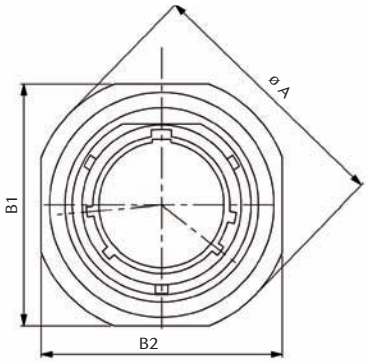

Panel cut out

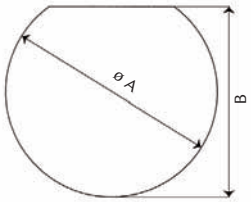

Shell size	ØA ±0.3	B1-B2 ±0.24	ØD $^{0}_{-0.12}$	E ±0.10	F ±0.24	G ±0.3	P max.	Tightening torque (mN)	Panel cut out	
									ØA ±0.10	B ±0.20
08	26.90	24.10	11.97	25.91	23.24	36.71	3.00	4	14.50	13.60
10	30.15	27.30	14.94					6	17.70	16.80
12	34.89	32.10	19.01					9	22.70	20.90
14	38.06	34.92	22.18					10	25.70	24.10
16	41.25	38.40	25.36					13	28.80	27.20
18	44.41	41.60	28.53	26.71		37.51		20	32.00	30.40
20	49.19	46.30	31.71					23	35.10	33.60
22	52.33	49.50	34.88					25	38.00	36.80
24	55.50	52.45	38.06					26	42.00	39.90

In-line receptacle

Standard version

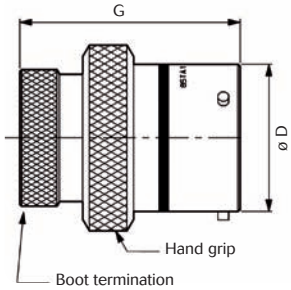

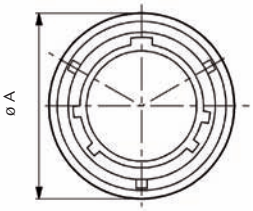

Lightweight version (specification 523)

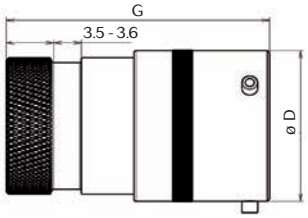

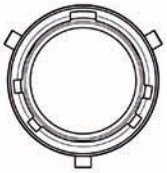

Shell size	8	10	12	14	16	18	20	22	24
ØA max.	17.6	20.7	25.1	28.3	31.4	34.7	38.1	41.2	44.7
ØD $^{+0.20}_{-0.13}$	12	15	19.05	22.22	25.4	28.57	31.75	34.92	38.1
G max.	33.5								

Note: All dimensions are in millimeters (mm)

8STA Series
Shell Sizes 08 to 24

Plug

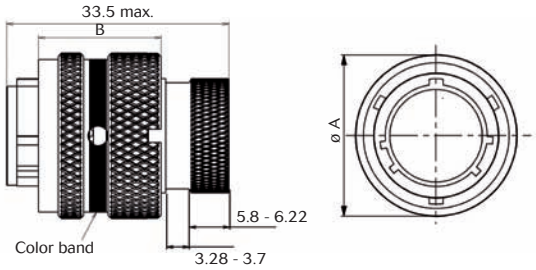

Shell size	ØA max.	B max.
08	18.70	18.55
10	21.50	
12	25.10	
14	29.00	
16	32.20	
18	35.40	
20	38.20	19.30
22	41.30	
24	44.50	19.05

Orientation

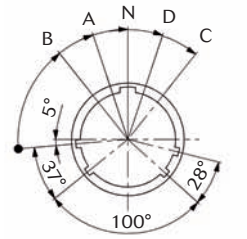

Viewed from face of receptacle

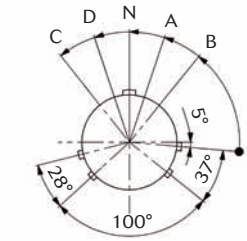

Viewed from face of plug

Shell size	N Red	A Yellow	B Blue	C Orange	D Green
08	95°	77°	-	-	113°
10	95°	81°	67°	123°	109°
12	95°	75°	63°	127°	116°
14	95°	74°	61°	129°	116°
16	95°	77°	65°	125°	113°
18	95°	77°	65°	125°	113°
20	95°	77°	65°	125°	113°
22	95°	80°	69°	121°	110°
24	95°	80°	69°	121°	110°

For each shell size, U orientation can be mateable with any other orientations.

Note: All dimensions are in millimeters (mm)

© 2013 - SOURIAU

8STA Series
Integrated Clinch Nuts

Description

- A convenient & time saving feature - Weight saving opportunities: Elimination of nut plates
- SOURIAU's Offer:
  . 12 shell sizes available, from 02 to 24
  . Available for standard crimp receptacle (shell type 0) & PCB receptacle (shell type 2)

Technical features

Current solution:

Connector + Nut plate

NEW solution:

Integrated clinchnut on the flange

Mechanical

- **Shell:**
  Aluminium alloy
- **Shell plating:**
  Conductive black zinc
- **Insulator:**
  Thermoplastic
- **Grommet & seal:**
  Liquid silicone rubber
- **Contact:**
  Copper alloy
- **Contact plating:**
  Gold
- **Endurance:**
  500 mating cycles
- **Shock:**
  300g for 3ms and EIA-364-27
- **Vibration:**
  147m/s2, 10 to 2000Hz
- **Contact retention:**

Size 26:	35 N
Size 22D:	45 N
Size 20:	60N
Size 16:	100 N
Size 12:	100 N
Size 8:	110 N
Size 4:	200 N

Climatic

- **Operating temperature:**
  -55°C to +175°C
- **Sealing mated connectors:**
  IP67 (1 metre for 30 min minimum)
- **Salt spray:**
  48 hours

Electrical

- Please see details in each section concerned

© 2013 - SOURIAU

Ordering information

Basic series	8STA	0	10	35	P	N	499

Shell type
- **0:** Oval flange receptacle
- **2:** Oval flange receptacle with PCB contacts

Shell size
- **02 - 04 - 06 - 08 - 10 - 12 - 14 - 16 - 18 - 20 - 22 - 24**

Contact layout
- See pages 10 to 13

Type of contact
- **P:** Pin
- **S:** Socket

Orientation
- **N:** Red / **A:** Yellow / **B:** Blue / **C:** Orange / **D:** Green / **U:** Universal

Specification (mandatory)
- **499:** Integrated nut on the flange - M2 insert for sizes 02 to 06 / M3 insert for sizes 08 to 24
- **528:** Integrated nut on the flange - M2.5 insert for sizes 02 to 06

Dimensions

Oval flange receptacle

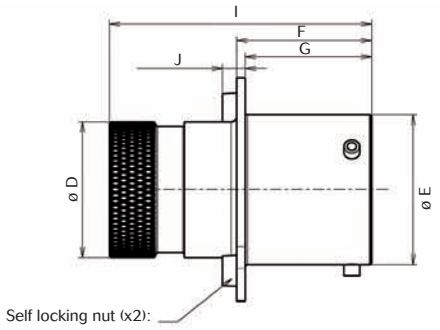

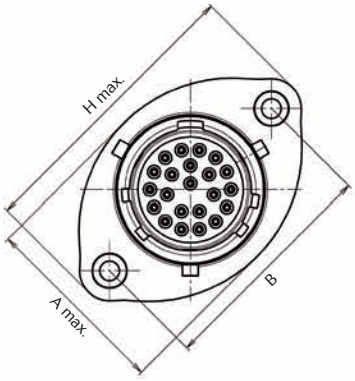

Panel cut out

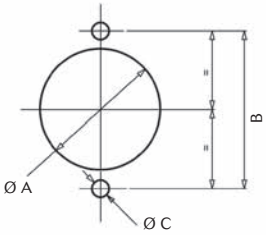

Shell size	A max.	B ±0 20	ø D	ø E	F	G	H	I	J	Panel cut out		
										ø A ±0 10	B ±0 20	ø C ±0 20
02	10.50	15.4	7.20	8.30	10.15	8.80	21.4	16.30	3.22	9.30	15.30	3.10
04	13.2	16.4	8.6	10.2	10.7	9.2	22.3	18.30	3.37	12.00	16.20	
06	15.0	18.2	10.35	12.0	12.95	10.95	24.0	23.25	3.83	13.00	18.00	
08	16.50	21.40	10.62	12.00	17.21	16.05	29.25	33.4	3.32	14.50	21.40	3.60
10	19.50	25.90	13.72	15.00			33.75			17.40	25.90	
12	24.00	29.10	17.26	19.05			36.95			21.90	29.10	
14	27.00	32.50	20.41	22.22			40.35			25.00	32.50	
16	30.30	34.80	23.60	25.40			42.65			28.20	34.80	
18	33.70	38.20	26.76	28.57			46.05			31.40	38.20	
20	37.00	41.60	29.93	31.75		15.29	49.45			34.60	41.60	
22	40.40	45.00	33.11	34.90			52.85			37.60	45.00	
24	43.40	49.50	36.30	38.10	18.20		57.35			41.00	49.50	4.10

Note: All dimensions are in millimeters (mm)

© 2013 - SOURIAU

Oval flange receptacle with PCB contacts

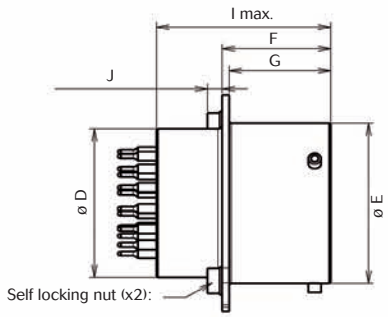

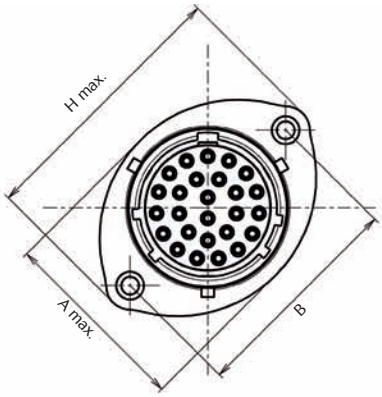

Panel cut out

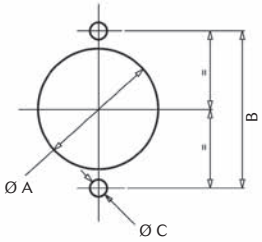

Shell size	A max.	B ±0 20	ø D max.	E	F	G	H max.	I max.	J	Panel cut out		
										ø A ±0 10	B ±0 20	ø C ±0 20
02	10.5	15.3	7.2	8.3	10.15	8.8	21.3	17.5	2.05	9.30	15.30	3.10
04	13.2	16.4	8.6	10.2	10.7	9.2	22.2	18.3		12.00	16.20	
06	15.0	18.2	10.35	12.0	12.95	10.95	24.0	23.25		13.00	18.00	
08	16.50	21.40	11.10	12.00	17.21	16.05	42.40	27.65	2.72	14.50	21.40	3.60
10	19.50	25.90	13.90	14.87						17.40	25.90	
12	24.00	29.10	17.35	19.05						21.90	29.10	
14	27.00	32.50	20.50	22.22						25.00	32.50	
16	30.30	34.80	23.70	25.40						28.20	34.80	
18	33.70	38.20	26.91	28.57						31.40	38.20	
20	37.00	41.60	30.11	31.77		15.29				34.60	41.60	
22	40.40	45.00	33.20	34.90						37.60	45.00	
24	43.40	49.50	36.40	38.10	18.20					41.00	49.50	4.10

For gaskets, please see page 58.

Note: All dimensions are in millimeters (mm)

© 2013 - SOURIAU

8STA Series
High Density

NEW

Description

- Derived from MIL-DTL-38999 & JN1003 standard
- Rugged aluminium body to ensure long service life in the harshest environment
- 100% scoop proof
- Available in 6 shell sizes: 02-05; 04-06; 06-09; 08-12; 10-26; 12-43
- Contacts #26 for AWG 24 to 30

Technical features

Mechanical

- **Shell:**
  Aluminium alloy
- **Shell plating:**
  Conductive black zinc
  Nickel (F)
- **Insulator:**
  Thermoplastic
- **Grommet & seal:**
  Liquid silicone rubber
- **Contact:**
  Copper alloy
- **Contact plating:**
  Gold
- **Endurance:**
  500 mating cycles
- **Shock:**
  300g for 3ms and EIA-364-27
- **Vibration:**
  147m/s2, 10 to 2000Hz

Climatic

- **Operating temperature:**
  -55°C to +175°C
- **Sealing mated connectors:**
  IP67 (1 metre for 30 min minimum)
- **Salt spray:**
  48 hours

Electrical

- **Contact resistance:**
  Size 26: 16mΩ
- **Insultation resitance:**
  ≥5000mΩ (at 500Vdc)
- **Contact rating:**
  Size 26: 3 Amp
- **Shell continuity:**
  ≤10mΩ

© 2013 - SOURIAU

Ordering information

Basic series	8STA	6	12	43	P	N

Shell type:
- **0:** Oval flange receptacle
- **1:** In line receptacle
- **2:** Oval Flange receptacle with PCB contacts
- **6:** Plug
- **7:** Jam nut receptacle

Shell size:
02; 04; 06; 08; 10; 12

Contact layout: See below

Type of contact:
- **P:** Pin
- **S:** Socket

Orientation:
N: Red; **A:** Yellow; **B:** Blue; **C:** Orange; **D:** Green; **E:** Grey (shell size 02 only); **U:** Universal

Specification:
- **None :** Standard crimp version
- **499:** Integrated clinch nut on the flange:
  - . M2 insert (shell type 0 & 2 only for shell sizes 04 & 06)
  - . M3 insert (shell type 0 & 2 only for shell sizes 08, 10 & 12)
- **523:** Light weight in line receptacle - for shell sizes 08 to 12 (shell type 1 only)
- **528:** Integrated clinch nut on the flange: M2.5 insert (shell type 0 & 2 only for shell sizes 04 & 06)
- **566:** Rackable plug - for shell sizes 10 & 12 (shell type 6 only)

Contact layouts

02	04	06	08	10	12
05	06	09	12	26	43
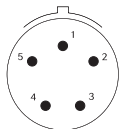	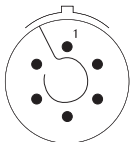	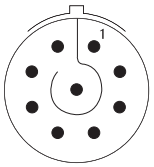	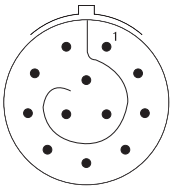	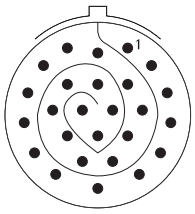	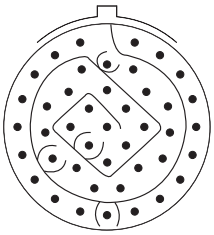
5#26	6#26	9#26	12#26	26#26	43#26

© 2013 - SOURIAU

8STA Series
PCB Connectors

Description

- Derived from MIL-DTL-38999 & Eurofighter JN 1003, 8STA connectors use the extensive SOURIAU range of 38999 medium and high density signal contact layouts
- Rugged aluminium body to ensure long service life in the harshest environment
- 8STA PCB connectors are available in shell sizes 02 to 24 (12 sizes)
- 100% scoop proof
- Available with clinch nut
- 6 colour coded keyway orientations

Technical features

Mechanical

- **Shell:** Aluminium
- **Shell palting:** Conductive black zinc
- **Insulator:** Liquid silicone rubber
- **Seal:** Liquid silicone rubber
- **Contact:** Copper alloy
- **Contact plating:** Gold
- **Endurance:** 500 matings/unmatings
- **Shock:** 300g for 3ms and EIA-364-27
- **Vibration:** 147m/s2, 10 to 2000 Hz

Electrical

- **Contact resistance:**
  Size 26: 16 mΩ
  Size 22D: 14.6 mΩ
  Size 20: 7.3 mΩ
  Size 16: 3.8 mΩ
- **Insulation resitance:**
  ≥ 5000mΩ (at 500Vdc)
- **Contact rating:**
  Size 26: 3 Amp
  Size 22D: 5 Amp
  Size 20: 7.5 Amp
  Size 16: 13 Amp
- **Shell continuity:** ≤ 10mΩ

Climatic

- **Temperature range:** -55°c to +175°c
- **Sealing mated connectors:**
  IP 67 (1 metre for 30 min minimum)
- **Salt spray:** 48 hours

© 2013 - SOURIAU

Ordering information

Basic series	8STA	2	12	35	P	N	-
Shell type: **2:** Oval flange receptacle with PCB contacts							
Shell size: **02; 04; 06; 08; 10; 12; 14; 16; 18; 20; 22; 24**							
Contact layout: See pages 10 to 13							
Type of contact: **P:** Pin **S:** Socket							
Orientation: **N; A; B; C; D; E** (E only for size 02)							
Specification : **None:** Standard version **499:** Integrated clinch nut on flange (M2 for sizes 02, 04 & 06; M3 for sizes 08 to 24) **528:** Integrated clinch nut on flange (M2.5 for sizes 02, 04 & 06) **571:** Specific PC tail (length = 4.6mm) - only available for sizes 08 to 24 (see page 31) **625:** Specific PC tail (length = 8.5mm) - only available for sizes 08 to 24 (see page 31)							

Dimensions

Size 02

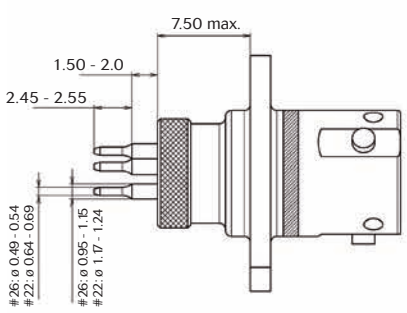

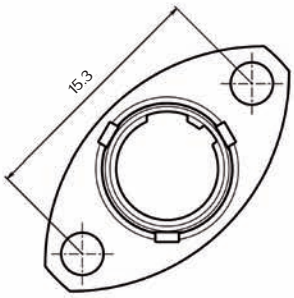

Panel cut out

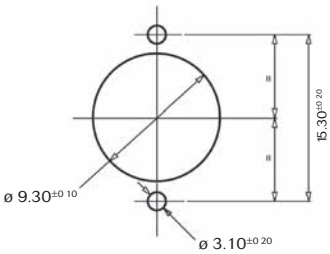

Note: All dimensions are in millimeters (mm)

© 2013 - SOURIAU

Size 04

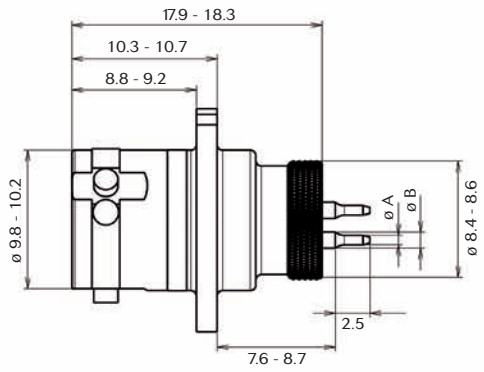

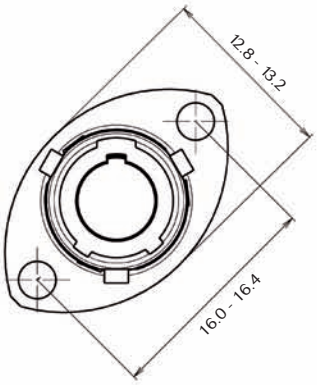

Panel cut out

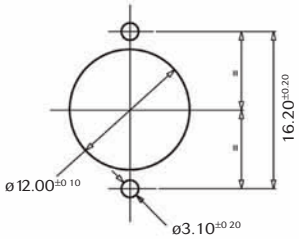

Layouts	Contacts	ø A	ø B
04-35	3 contacts #22D	0.64 / 0.69	1.19 / 1.24
04-05	5 contacts #26	0.49 / 0.54	1.1 / 1.15

For contact P/N, please consult us

Sizes 08 to 24

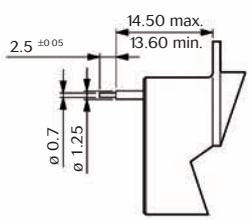

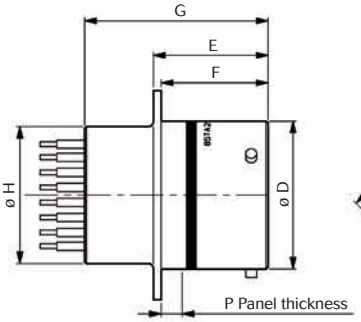

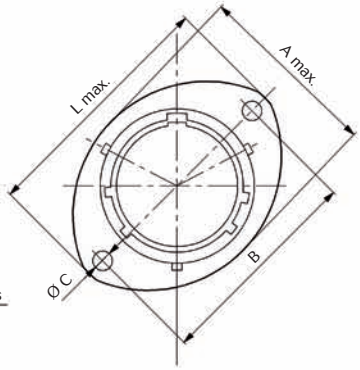

Panel cut out

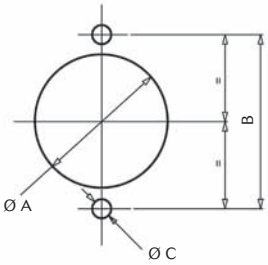

Shell size	A max.	B ±0.20	ø C 0	ø D +0.2	E 0	F 0	G max.	ø H max.	L max.	P max.	Panel cut out		
											ø A ±0.10	B ±0.20	ø C ±0.20
08	16.50	21.40	3.20	12.00	17.21	16.05	27.65	11.10	27.20	3.00	14.50	21.40	3.60
10	19.50	25.90		14.97				13.90	32.00		17.40	25.90	
12	24.00	29.10		19.05				17.35	35.20		21.90	29.10	
14	26.90	32.50		22.22				20.50	38.40		25.00	32.50	
16	30.30	34.80		25.40				23.70	41.00		28.20	34.80	
18	33.70	38.20		28.57				26.91	44.70		31.40	38.20	
20	37.00	41.60		31.77		15.29		30.11	47.80		34.60	41.60	
22	40.40	45.00		34.90				33.20	51.00		37.60	45.00	
24	43.40	49.50	3.77	38.10	18.20			36.40	55.80		41.00	49.50	4.10

Note: All dimensions are in millimeters (mm)

© 2013 - SOURIAU

Specific PCB versions

Specification 571

Available from shell sizes 08 to 24 with layouts using contacts #22D et #20
Specific tail length = 4.6 mm
Also available with clinch nut: please consult us.

Specification 625

Available from shell sizes 08 to 24 with layouts using contacts #22D et #20
Specific tail length = 8.5 mm
Also available with clinch nut: please consult us.

Dimensions

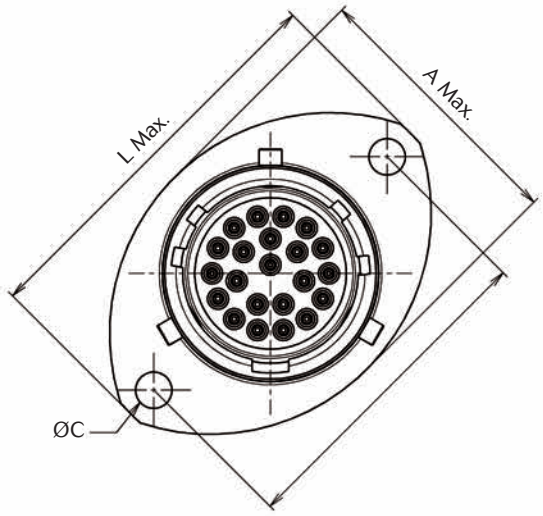

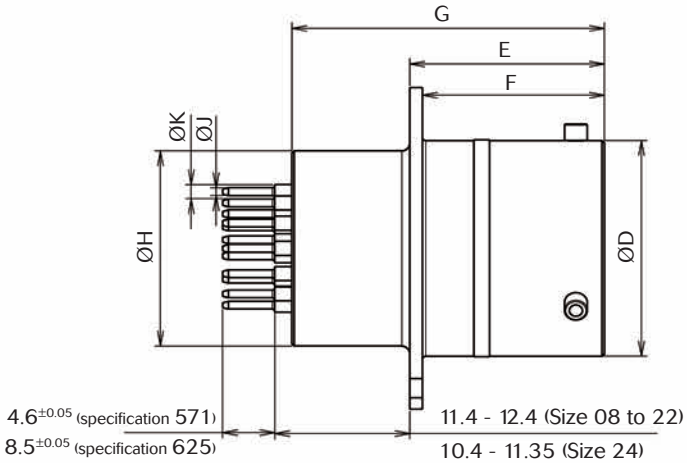

Shell size	A Max	B±0.2	ØC±0.15	ØD±0.2	E±0.15	F±0.13	G Max	ØH Max	L Max
08	16.5	21.4	3.15	12	17.21	16.05	27.65	11.1	27.2
10	19.5	25.9		14.97				13.9	32
12	24	29.1		19.05				17.35	35.2
14	26.9	32.5		22.22				20.5	38.4
16	30.3	34.8		25.4				23.7	41
18	33.7	38.2		28.57				26.91	44.7
20	37	41.6		31.77		15.29		30.11	47.8
22	40.2	45		34.9				33.2	51
24	43.4	49.5	3.77±0.15	38.1	18.2			36.4	55.8

Note: All dimensions are in millimeters (mm)

© 2013 - SOURIAU

8STA Series
Power Contacts

Description

- A #4 contact for a wide range of wire sizes: Size 8, 10, 16, 25 & 35 mm²
- Easy visual wire identification: Coloured band on contact
- Allow the use of small wire sections: Reducer for wires 8 & 10 mm² in contact barrel 16mm²
- Ideal for high power applications: Up to 200A continuous (12-01 specif. 261)
- Space & cost saving with mixed connectors: Only one connector instead of 2 to transmit signal & power

Technical features

Mechanical

- **Shell:**
  Aluminium alloy
- **Shell plating:**
  Conductive black zinc
- **Insulator:**
  Thermoplastic
- **Grommet & seal:**
  Liquid silicone rubber
- **Contact:**
  Copper alloy
- **Contact plating:**
  Gold over nickel
- **Endurance:**
  500 mating cycles
- **Shock:**
  300g for 3ms and EIA-364-27
- **Vibration:**
  147m/s2, 10 to 2000Hz
- **Contact retention:**
  Size 22D: 45 N — Size 20: 60 N
  Size 16: 100 N — Size 12: 100 N
  Size 8: 110 N — Size 4: 200 N

Climatic

- **Operating temperature:**
  -55°C to +175°C
- **Sealing mated connectors:**
  IP67 (1 metre for 30 min minimum)
- **Salt spray:**
  48 hours

Electrical

- **Test voltage:**

Service	M	N	I	II
Sea level	1300	1000	1800	2300

- **Contact resistance:**
  Size 22D: 14.6 mΩ
  Size 20: 7.3 mΩ
  Size 16: 3.8 mΩ
  Size 12: 3.5 mΩ
  Size 8: 3 mΩ
  Size 4: 2 mΩ
- **Insultation resitance:**
  ≥ 5000 mΩ (at 500 Vdc)
- **Contact rating:**
  Size 22D: 5 A
  Size 20: 7.5 A
  Size 16: 13 A
  Size 12: 23 A
  Size 8: 45 A
  Size 4: 80 A
- **Shell continuity:**
  ≤10 mΩ

© 2013 - SOURIAU

Ordering information

Basic series	8STA	0	12	01	P	N	261

Shell type
- **0:** Oval flange receptacle (for front or rear mounting)
- **1:** In-line receptacle
- **6:** Plug
- **7:** Jam nut receptacle

Shell size: 10 - 12 - 16 - 18 - 20 - 24

Contact layout: See below

Type of contact
- **P:** Pin — **A:** without pin contacts (specifications 261 & 545 only)
- **S:** Socket — **B:** without socket contacts (specifications 261 & 545 only)

Orientation: N: Red / **A:** Yellow / **B:** Blue / **C:** Orange / **D:** Green / **U:** Universal

Specification
- **None:** for contact layouts 20-48 & 24-44
- **251:** for contact layouts 10-80, 16-02, 16-75, 18-18, 20-75, 20-78, 24-07, 24-41 & 24-46
- **261:** only for 12-01
- **540:** Layout 12-01 with protected socket
- **545:** Layout 24-44 - delivered with contact #16 & without contact #4

Note : (layout 12-01 specif. 261 only)
1) Standard connector (8STAx1201yz261 where x = shell type; y = type of cts; z = orientation) is provided with power contacts for 16mm² wire.
2) For 10mm² wire, order standard connector (note 1) + reducing sleeve 8400 2351 A separately.
3) For 25mm² wire, order connector without contact, see A & B details in type of contact (ex : 8STAx1201Az261 or Bz261) + contact separately (pin : 8599 7598 900 & socket : 8599 7599 900)
4) For 35mm² wire, order connector without contact, see A & B details in type of contact (ex : 8STAx1201Az261 or Bz261) + contact separately (pin : 8599 0313 & socket : 8599 0316)

Note : (layout 24-44 specif. 545 only)
Specif. 545 = connector delivered with contact #16 & without power contact #4 & boots, power contact #4 to be ordered separately according wire section to be used (see table next page)

Contact layouts

10

80
spc 251

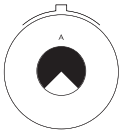

1 #8 power
Service I

12

01
spc 261

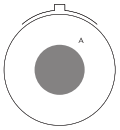

1 #4 power
Service M
200A continuous

16

02
spc 251

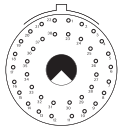

1 #8 power
38 #22D
Service N

75
spc 251

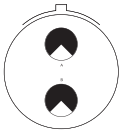

2 #8 power
Service M

18

18
spc 251

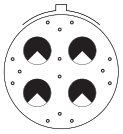

14 #22D
4 #8 power
Service M

20

48

4 #8 power
Service I

78
spc 251

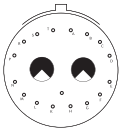

17 #22D
2 #8 power
Service M

24

07
spc 251

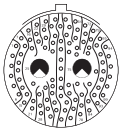

2 #8 power
97 #22D
Service M

41
spc 251

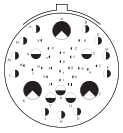

22 #22D
3#20, 11#16
2#12, 3#8 power
Service N

44

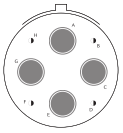

4 #4 power
4 #16
Service I

46
spc 251

2 #8 power
4 #16
40 #20
Service I

© 2013 - SOURIAU

Power contacts

Designation	Wire 16 mm²	Wire 25 mm²	Wire 35 mm²
	Removable contact		Non removable contact
Colour band	Red	Blue	Green
Pin contact	8599 7520A 900	8599 7598 900	8599 0313
Socket contact	8599 7521A 900	8599 7599 900	8599 0316
Reducer - wire 8 & 10 mm²	8400 2351A	-	-
Crimping tool	M22520/23-01 + Die M22520/23-04 + Positionner M22520/23-11 And for widerner 50 mm² : M22520/23-01 + Die WA23-4 + Positionner WA23-176L	M22520/23-01 + Die M22520/23-04 + Positionner M22520/23-11	M22520/23-01 + Die 8599-0319 + Positionner 8599-0318 (male) + Positionner 8599-0317 (female)
Plastic extraction tool	M81969/14-07 (blue)		-

Dimensions

Size 4 power contact

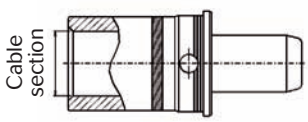

Pin contact

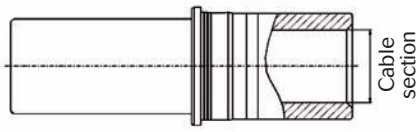

Socket contact

Contact	Cable section		
	16 mm²	25 mm²	35 mm²
Pin/Socket	Ø6.5 Min.	Ø7.33 Min.	Ø8.65 Min.
Colour band	Red	Blue	Green

Reducer for wire 8 & 10 mm²

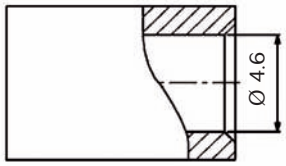

Compatible with pin & socket contact / wire 16 mm²

Reducer 8 & 10 mm²

Pin contact

Socket contact

Note: All dimensions are in millimeters (mm)

© 2013 - SOURIAU

8TA Series
Compact Low Profile

Description

- Rugged aluminium body to ensure long service life in the harshest environment
- Compact low profile derived from MIL-DTL-38999 Series 2
- 6 gold plated #22D contacts
- Environment sealing from interfacial seal and rear grommet
- Positive locking mechanism with locked colour indicators 3 keyway orientations
- Not scoop proof
- Conductive black zinc plating

Technical features

Mechanical

- **Shell:**
  Aluminium alloy
- **Shell plating:**
  Conductive black zinc
- **Insulator:**
  Thermoplastic
- **Grommet & seal:**
  Liquid silicone rubber
- **Contact:**
  Copper alloy
- **Contact plating:**
  Gold
- **Endurance:**
  500 matings/unmatings operations
- **Shock:**
  300g for 3ms and EIA-364-27
- **Vibration:**
  random 100 to 1000 Hz - 1 g^2/Hz
- **Contact retention:**
  45 N

Climatic

- **Operating temperature:**
  -55°C to +175°C
- **Sealing mated connectors:**
  IP67 (1 metre for 30 min minimum)
- **Salt spray:**
  48 hours

Electrical

- **Test voltage:**
  1300 Vrms (sea level)
- **Contact resistance:**
  <14.6 mΩ
- **Insultation resitance:**
  ≥ 5000 mΩ (at 500 Vdc)
- **Contact rating:**
  5 A
- **Shell continuity:**
  <60 mΩ

© 2013 - SOURIAU

Ordering information

Basic series	8TA	0	08	35	P	N
Shell type **0:** Oval flange receptacle (for front or rear mounting) **1:** In-line receptacle **6:** Plug **7:** Jam nut receptacle						
Shell size **08**						
Contact layout **35** (6 contacts #22D)						
Type of contact **P:** Pin **S:** Socket						
Orientation **N:** Red / **A:** Yellow / **D:** Green						

Dimensions

Plug

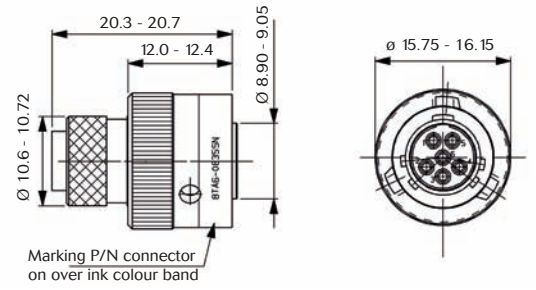

In-line receptacle

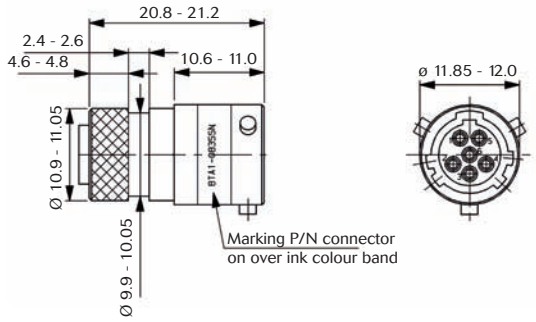

Oval flange receptacle

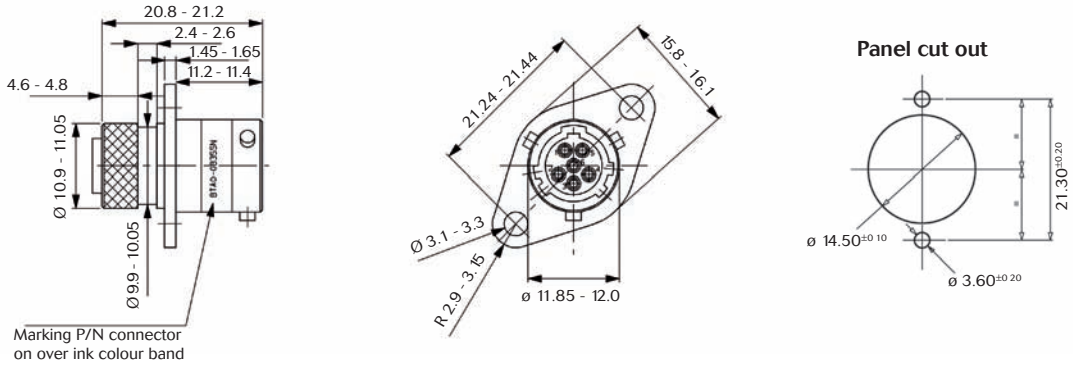

Note: All dimensions are in millimeters (mm)

© 2013 - SOURIAU

Jam nut receptacle

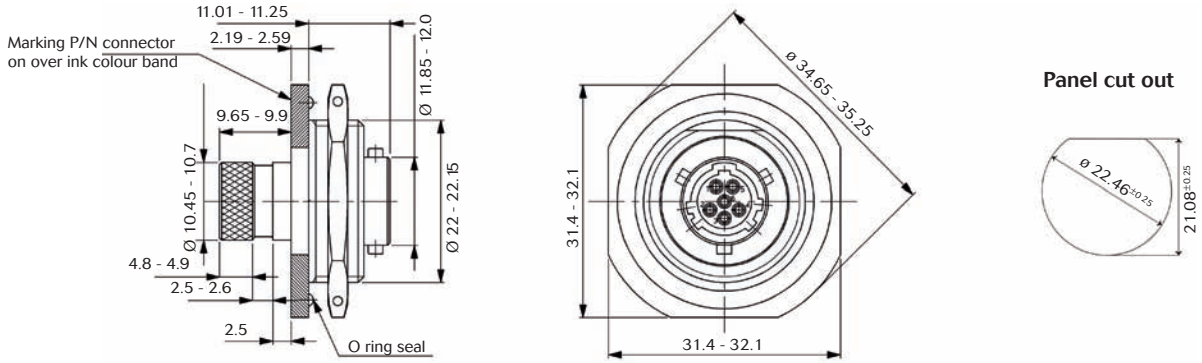

Orientation

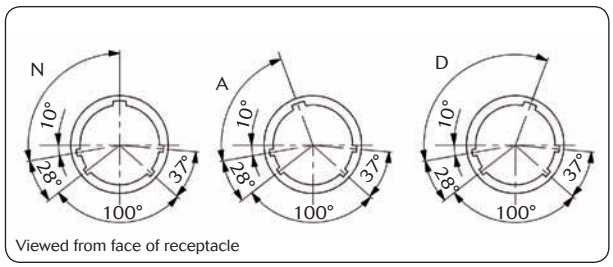

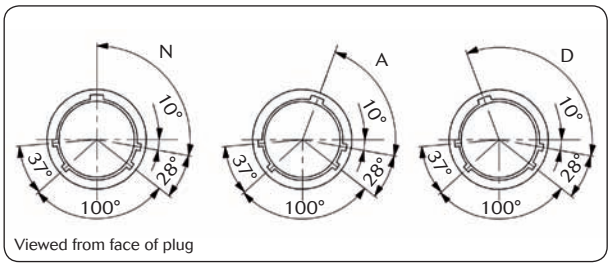

Key positions	Alpha 1	Colour band
N	100°	Red
A	82°	Yellow
D	118°	Green

Note: All dimensions are in millimeters (mm)

© 2013 - SOURIAU

8STA Series

8STA/8TA Series

Derived Series

- Quick release for steering boss system 40
- Blind mating plug 42
- Through bulkhead 44
- Hermetic shell size 02 46
- Hermetic fuel tank 48
- Fuel immersible 50

8STA Series
Quick Release for Steering Boss System

Description

- Rugged aluminium body to ensure long service life in the harshest environment.
- 100% scoop proof.
- Available in 2 shell sizes: 10 & 12 (Please consult us for other sizes).
- Standard insulators shell sizes 10 & 12 available.

Technical features

Mechanical

- **Shell:**
  Aluminium
- **Shell plating:**
  Conductive black zinc
- **Insulator:**
  Thermoplastic
- **Grommet & seal:**
  Liquid silicone rubber
- **Contact:**
  Copper alloy
- **Contact plating:**
  Gold
- **Endurance:**
  500 matings/unmatings operations
- **Shock:**
  300g for 3ms and EIA-364-27
- **Vibration:**
  147m/s2, 10 to 2000Hz

Climatic

- **Operating temperature:**
  -55°C to +175°C
- **Sealing mated connectors:**
  IP67 (1 metre for 30 min minimum)
- **Salt spray:**
  48 hours

Electrical

- **Contact resistance:**
  Size 22D: 14.6mΩ
  See 8STA catalog for other contact size.
- **Insultation resitance:**
  ≥ 5000mΩ @ 500Vdc
- **Contact rating:**
  Size 22D: 5 Amp
  See 8STA catalog for other contact size.
- **Shell continuity:**
  ≤ 10mΩ

Ordering information

Basic series	**8STA**	**6**	**12**	**35**	**P**	**N**	**518**
Shell type **0:** Receptacle side **6:** Plug side							
Shell size: 08 (consult us) - **10** - **12**							
Contact layout: See pages 10 to 13							
Type of contact **P:** Pin **S:** Socket							
Orientation: N							
Specification (mandatory) **518:** Steering column							

© 2013 - SOURIAU

Dimensions

Shell size 10

Female Receptacle

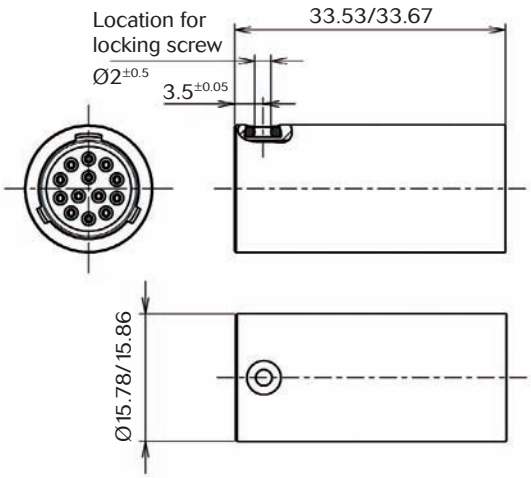

Male Plug

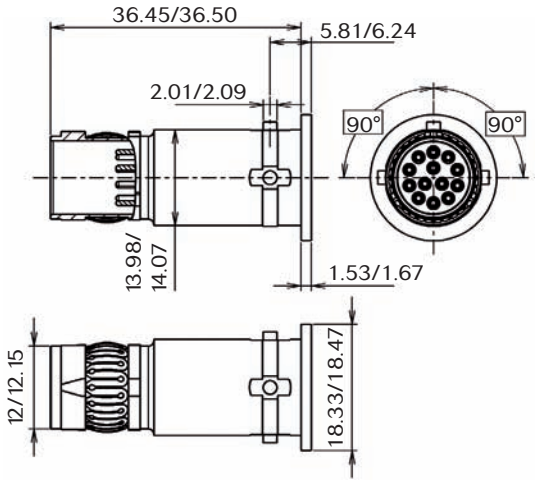

Shell size 12

Female Receptacle

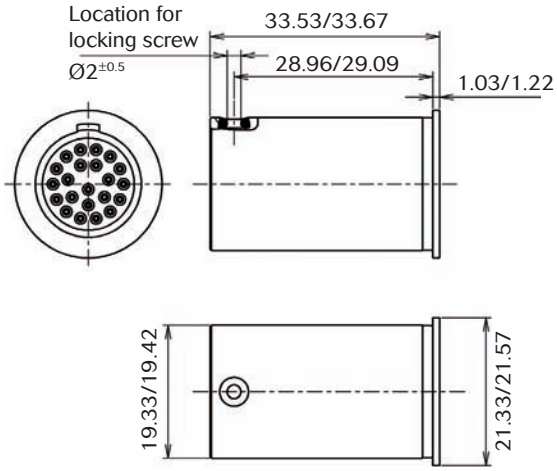

Male Plug

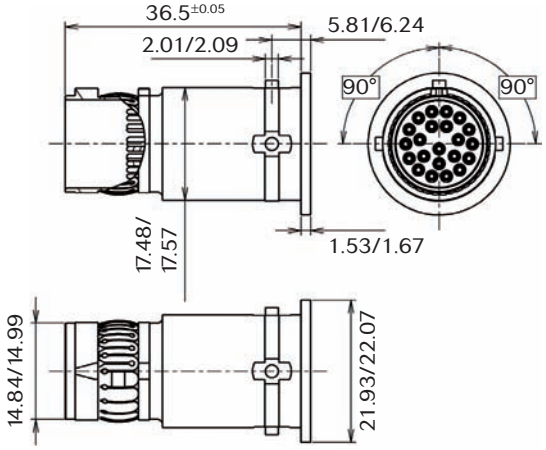

Mounting dimension requirement

Shell size 10

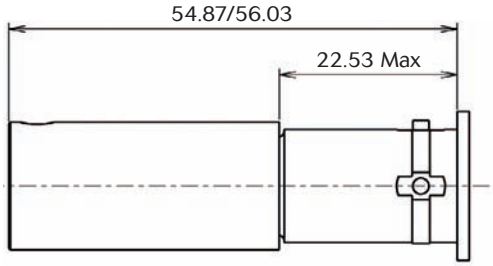

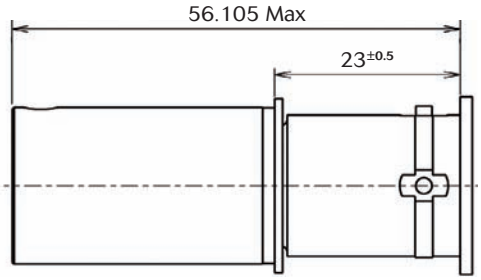

Shell size 12

Note: All dimensions are in millimeters (mm)

© 2013 - SOURIAU

8STA Series
Blind Mating Plug

Description

- Blind mating solution for quick connection in hard-to-reach areas.
- Specific 8STA plug:
  Compensating for misalignment in 3 axes.
- Blind connection:
  . Easy & fast connection without any coupling / uncoupling between float-mounting unit & fixed unit.
  . 100% Scoop proof.
- A versatile product:
  . Available in sizes 10, 12, 14 &16
  . All layouts according connector shell size.
  . Available in crimp contacts.
- Mandatory mating part:
  Standard jam nut receptacle 8STA7

Technical Features

Mechanical

- Shell: Aluminium alloy
- Shell plating: Conductive black zinc
- Insulator: Thermoplastic
- Grommet & seal: Liquid silicone rubber
- External cover: Green fluoro silicone
- Contact: Copper alloy
- Contact plating: Gold
- Contact retention:
  Size 22D: 45N Size 20: 60N
  Size 16: 100N Size 12: 100N
  Size 8: 110N Size 4: 200N
- Flange dimension:
  . Flange of plug size16 equivalent to receptacle size 22
  . Flange of plug size14 equivalent to receptacle size 20
  . Flange of plug size12 equivalent to receptacle size 18
  . Flange of plug size10 equivalent to receptacle size 16

Climatic

- Temperature range: -55°C to +175°C
- Sealing mated connectors:
  IP67 (1 meter for 30 min. minimum)
- Salt spray: 48 hours

Electrical

- Test voltage

Service	M	N	I	II
Sea level	1300	1000	1800	2300

- Contact resistance:
  Size 22D: 4.6 mΩ
  Size 20: 7.3 mΩ Size 16: 3.8 mΩ
  Size 12: 3.5 mΩ Size 4: 2 mΩ
- Insulation resistance:
  ≥ 5000 mΩ (at 500 Vdc)
- Contact rating:
  Size 22D: 5A Size 20: 7.5A
  Size 16: 13A Size 12: 23A
  Size 8: 45A Size 4: 80A

Compensating for misalignment in 3 axes

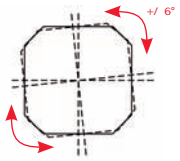

Angular

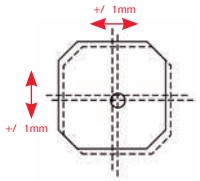

Axial

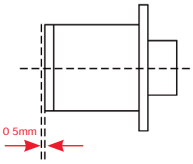

Longitudinal

© 2013 - SOURIAU

8STA Series
Blind Mating Plug

Ordering information

Series	8STA	6	12	35	S	N	566
Shell style **6:** Plug							
Shell size **10, 12, 14, 16**							
Contact layouts See pages 10 to 13							
Type of contacts **P:** Pin contacts **S:** Socket contacts							
Orientation **N:** Red							
Specification (mandatory) **566:** Rackable plug							

Dimensions

Plug Type 6

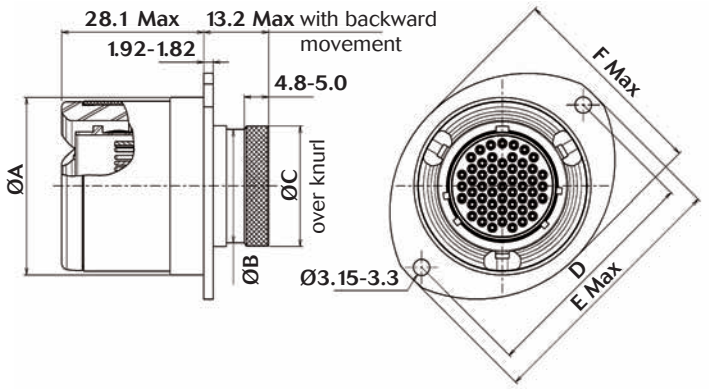

Mated Connector
(plug type 6 & jam nut receptacle type 7)

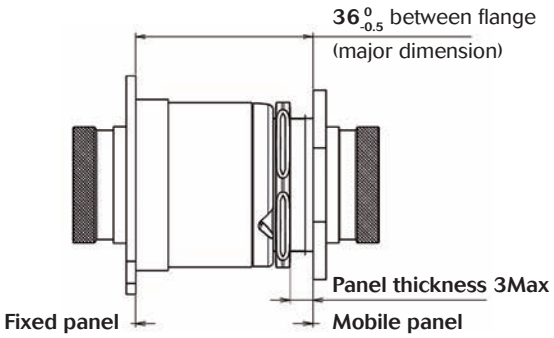

Shell size	ØA $^{+0.3}_{-0}$	ØB $^{+0.2}_{-0}$	ØC	D $^{+0.4}_{-0}$	E	F
10	25.17	12.85	13.72	34.60	41.00	30.30
12	28.35	15.92	17.26	38.00	44.70	33.70
14	31.52	18.90	20.41	41.40	47.90	37.00
16	34.70	22.08	23.60	44.80	51.00	40.40

Note: All dimensions are in millimeters (mm)

© 2013 - SOURIAU

8STA Series
Through Bulkhead

Description

- Significant time saving advantage over conventional plugs & receptacles: «Double receptacle» mounted on panel
- Male / female single way power contact #4 in a shell size 12
- Easy identification with colour coded bands: 5 visual keyway orientations
- Simplified connection through a bulkhead, eliminating hard wiring to the panel on one side
- Ideal for external use (dust, water etc.): IP67 (Interfacial & mating seals)

Technical features

- Easy mating/unmating on both sides of the bulkhead

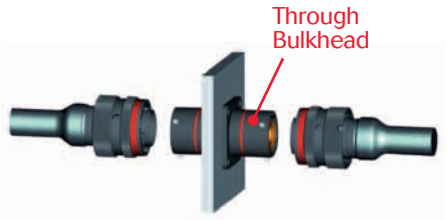

- Simplifies maintenance procedures having a detachable connector on each side of the bulkhead

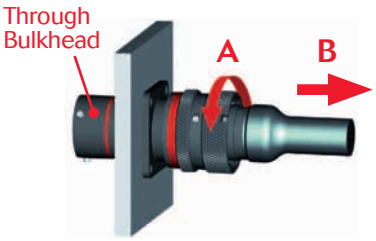

Mechanical

- **Shell:**
  Aluminium alloy
- **Shell plating:**
  Conductive black zinc
- **Insulator:**
  Thermoplastic
- **Grommet & seal:**
  Liquid silicone rubber
- **Contact:**
  Copper alloy
- **Contact plating:**
  Gold over nickel
- **Endurance:**
  500 mating cycles
- **Shock:**
  300g for 3ms and EIA-364-27
- **Vibration:**
  147m/s2, 10 to 2000Hz
- **Contact retention:**
  200 N

Climatic

- **Operating temperature:**
  -55°C to +175°C
- **Sealing mated connectors:**
  IP67 (1 metre for 30 min minimum)
- **Salt spray:**
  48 hours

Electrical

- **Test voltage:**
  1300 Vrms (sea level)
- **Contact resistance:**
  2 mΩ
- **Insultation resitance:**
  ≥ 5000 mΩ (at 500 Vdc)
- **Contact rating:**
  200A for use in 35°C max environnement
  For derating curve, please contact us

© 2013 - SOURIAU

Ordering information

Basic series	8STA	0	12	01	PS	N	500
Shell type **0:** Receptacle							
Shell size **12**							
Contact layout **01:** 1 power contact #4							
Type of contact **PS:** Pin + Socket contacts							
Orientation **N:** Red / **A:** Yellow / **B:** Blue / **C:** Orange / **D:** Green / **U:** Universal							
Specification (mandatory) **500:** Through Bulkhead connector							

Dimensions

Through Bulkhead receptacle

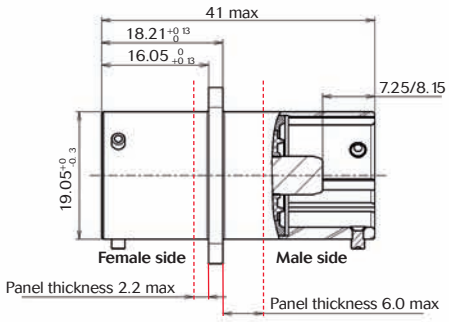

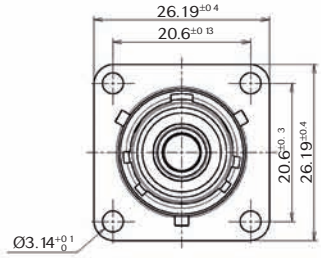

Panel cut out

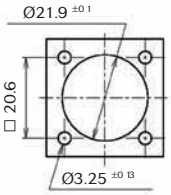

Gasket

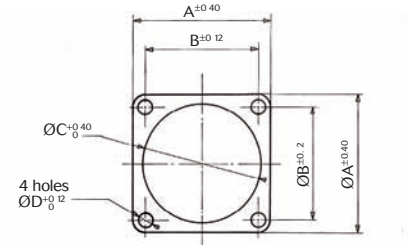

Shell size	Part number	A	B	Ø C	Ø D
12	8525-1433	26.18	20.62	19.05	3.30

Note: All dimensions are in millimeters (mm)

© 2013 - SOURIAU

8STA Series
Hermetic Shell Size 02

Description

- The smallest hermetic circular 5 way PC tail connector on the market
- Lightweight 8STA connector: 3 grs max
- Suitable for welding directly to sensor bodies: Designed for weld fixing
- Excellent corrosion resistance: Stainless steel body
- Excellent hermeticity: Hermetic glass bead (1.10^{-7} cm^3/s)
- Intermateable with standard plug size 02-05
- Easy identification with colour coded bands: 7 visual keyway orientations
- Rapid & secure locking system with audible click: Bayonet connector

Technical features

Mechanical

- **Shell:**
  Stainless steel
- **Shell plating:**
  Passivated
- **Insulator:**
  Glass bead
- **Contact:**
  Iron-Nickel (NiFe2)
- **Contact plating:**
  Nickel
- **Endurance:**
  500 mating cycles
- **Shock:**
  300g for 3ms and EIA-364-27
- **Vibration:**
  10 to 2000 Hz 30g

Climatic

- **Operating temperature:**
  -55°C to +175°C
- **Sealing mated connectors:**
  IP67 (1 meter for 30 min minimum)
- **Salt spray:**
  48 hours
- **Hermeticity:**
  $1.10^{-7} cm^3/s$

Electrical

- **Test voltage:**
  400V (sea level)
- **Contact resistance:**
  2 mΩ
- **Insultation resitance:**
  ≥5000MΩ (at 500Vdc)
- **Contact rating:**
  3 Amp

© 2013 - SOURIAU

Ordering information

Basic series	8STA	1	y	02	05	P	N	170
Shell type **1:** In-line connector								
Class **y:** Hermetic version								
Shell size **02**								
Contact layout **05:** 5 straight PCB contacts #26								
Type of contact **P:** Pin contacts								
Orientation **N:** Red / **C:** Orange - *please consult us for other keyway*								
Specification (mandatory) **170:** Hermetic shell size 02								

Dimensions

In-line receptacle

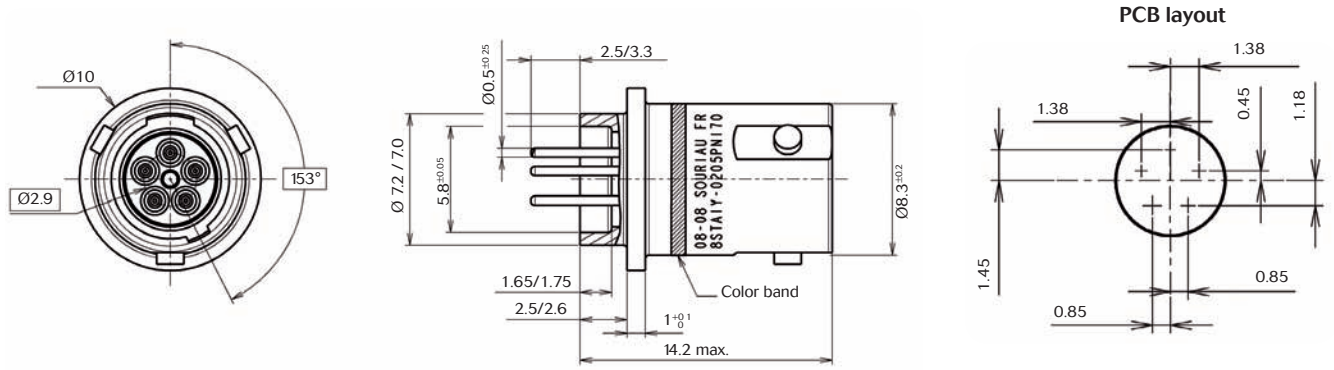

Note: All dimensions are in millimeters (mm)

8STA Series
Hermetic Fuel Tank

Description

- Hermetically sealed connector: 1.10^{-7} cm^3/s @ 15PSI
- Withstands pressure differential without loss of electrical performances: Glass to metal insert
- Excellent resistance to racing fuels & fluids: Viton® interfacial seal
- Excellent corrosion resistance: Stainless steel material
- Low profile design for heat shrink boot & cost effective connector
- Integrated backshell

Technical features

Mechanical

- **Shell:** Stainless steel
- **Shell plating:** Passivated
- **Insulator:** Glass bead
- **Contact:** Nickel iron
- **Contact plating:** Gold
- **Endurance:** 500 mating cycles
- **Shock:** 300g for 3ms and EIA-364-27
- **Vibration:** 10 to 2000 Hz 30g

Climatic

- **Operating temperature:**
  -55°C to +175°C
- **Sealing mated connectors:**
  IP67 (1 meter for 30 min minimum)
- **Salt spray:**
  48 hours
- **Hermeticity:**
  $1.10^{-7}cm^3/s$

Electrical

- **Test voltage:**
  Service I: 1800V
  Service M: 1300V
- **Contact resistance:**
  2 mΩ
- **Insultation resitance:**
  ≥5000MΩ (at 500Vdc)
- **Contact rating:**
  Size 16: 10 A
  Size 20: 5 A
  Size 22D: 3 A

Ordering information

Basic series	8STA	7	y	10	98	P	N	022
Shell type **7:** Jam nut receptacle								
Class **y:** Hermetic version								
Shell size **10, 12, 14**								
Contact layout See next page for layouts available								
Type of contact **P:** Pin contacts								
Orientation **N:** Red *(please consult us for other orientation)*								
Specification (mandatory) **022:** Fuel immersible version								

© 2013 - SOURIAU

Contact layouts (viewed from front face of male insulator)

10

35

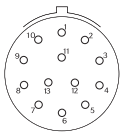

13 #22D
Service M

98

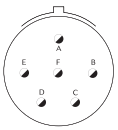

6 #20
Service I

12

04

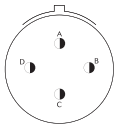

4 #16
Service I

35

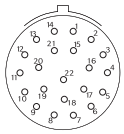

22 #22D
Service M

98

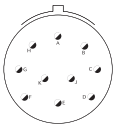

10 #20
Service I

14

35

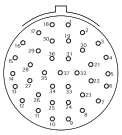

37 #22D
Service M

97

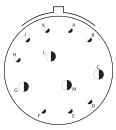

4 #16
8 #20
Service I

Dimensions

Jam nut receptacle

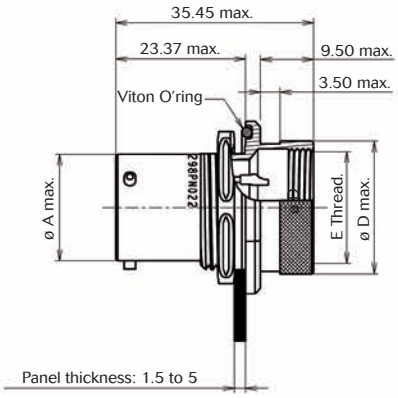

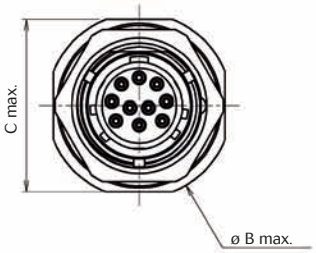

Panel cut out

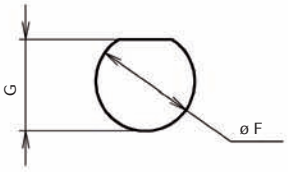

Shell size	ø A max.	ø B max.	C max.	ø D max.	E Thread	Panel cut out	
						ø F ±0 10	G ±0 20
10	15.04	28.40	25.95	**20.50**	**M18 x 1**	17.70	16.80
12	19.09	33.00	30.75	**23.67**	**M21 x 1**	22.70	20.90
14	22.26	36.30	33.85	**26.84**	**M24 x 1**	25.70	24.10

Note: All dimensions are in millimeters (mm)

© 2013 - SOURIAU

8STA/8TA Series
Fuel Immersible

Description

- Available for 8STA & 8TA Series
- Continuous immersion without loss of performance: Special fuel resistant insert
- Excellent connector sealing on panels by using the jam nut version

Technical features

Mechanical

- **Shell:**
  Aluminium alloy
- **Shell plating:**
  Conductive black zinc
- **Insulator:**
  Thermoplastic
- **Grommet & seal:**
  Fluoroelastomer
- **Contact:**
  Copper alloy
- **Contact plating:**
  Gold
- **Endurance:**
  500 mating cycles
- **Shock:**
  300g for 3ms and EIA-364-27
- **Vibration:**
  . 8STA: 147m/s2, 10 to 2000Hz
  . 8TA: random 100 to 1000 Hz - 1G²/Hz
- **Contact retention:** (8TA: Size 22D only)

Size 22D:	45 N
Size 20:	60N
Size 16:	100 N
Size 12:	100 N

Climatic

- **Operating temperature:**
  -55°C to +175°C
- **Sealing mated connectors:**
  IP67 (1 metre for 30 min minimum)
- **Salt spray:**
  48 hours

Resistance to fluids

- **Withstands most of Motorsport fluids**

Electrical

- **Test voltage:**
  1300 Vrms
- **Contact resistance:** (8TA: Size 22D only)

Size 22D:	14.6 mΩ
Size 20:	7.3 mΩ
Size 16:	3.8 mΩ
Size 12:	3.5 mΩ

- **Insultation resitance:**
  ≥ 5000 mΩ (at 500 Vdc)
- **Contact rating:** (8TA: Size 22D only)

Size 22D:	5 A
Size 20:	7.5 A
Size 16:	13 A
Size 12:	23 A

- **Shell continuity:**
  ≤10 mΩ

© 2013 - SOURIAU

Ordering information

Basic series	**8STA** **8TA**	**0** **0**	**08** **08**	**35** **35**	**P** **P**	**N** **N**	**022** **022**
Shell type **0:** Oval flange receptacle **1:** In-line receptacle **6:** Plug **7:** Jam nut receptacle							
Shell size **04, 08, 10, 12, 14, 16**							
Contact layout See below							
Type of contact **P:** Pin contacts **S:** Socket contacts							
Orientation **N:** Red / **A:** Yellow / **D:** Green							
Specification (mandatory) **022:** Fuel immersible version							

Contact layouts

04

05

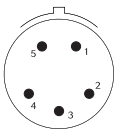

5 #26
Service R

06

6 #26
Service R

35

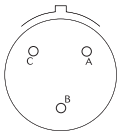

3 #22D
Service S

08

35

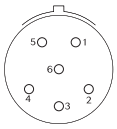

6 #22D
Service M

98

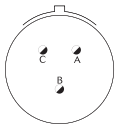

3 #20
Service I

10

05

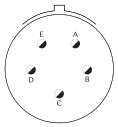

5 #20
Service I

35

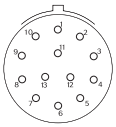

13 #22D
Service M

98

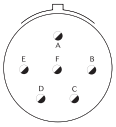

6 #20
Service I

12

98

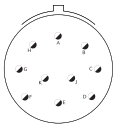

10 #20
Service I

14

35

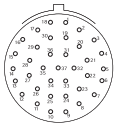

37 #22D
Service M

For both 8STA & 8TA, all others being for 8STA only.

8STA Series

8STA/8TA Series

Common Section

Contacts:
- Crimp contacts 54
- PCB contacts 55

Tooling:
- Crimping tools 56
- Wire stripping 57
- Insertion & extraction tools 57

Accessories:
- Filler plugs 58
- Boots 58
- Shrinkable termination detail 59
- Nut plates 59
- Gaskets 59
- Metal protective caps 60

Contacts

Crimp contacts

Contact size	Shell size & layout	Contact type	Contact Ø max.	Part numbers	Admissible wire section mm² Min.	Admissible wire section mm² Max.	Admissible wire section AWG Min.	Admissible wire section AWG Max.	External Ø over insulation (mm) Min.	External Ø over insulation (mm) Max.
26 High Density	Shell sizes 08 to 24	Male	0.50	8599-0297	0.055	0.215	30	24	0.60	0.83
		Female		8599-0298						
	04-05	Male	0.50	8599-0777 LY	0.095	0.24	30	24	0.60	0.83
		Female		8599-0778 900						
	02-05; 04-06 06-09	Male		8599-1001						
		Female		8599-1002						
22D Signal contact	Shell sizes 08 to 24	Male	0.76	8599-0702 JJ	0.09	0.38	28	22	0.76	1.37
		Female		8599-0706 900						
	02-35; 04-35 06-35 08-35 (8TA only)	Male	0.76	8599-0702 JJ	0.095	0.38	28	22	0.71	1.37
		Female		8599-0710 900						
20 Signal contact	Shell sizes 08 to 24	Male	1.00	8599-0703 SA	0.21	0.60	24	20	1.02	2.11
		Female		8599-0707 900						
16 Signal contact	Shell sizes 08 to 24	Male	1.60	8599-0704 MJ	0.60	1.34	20	16	1.65	2.77
		Female		8599-0708 900						
16 Coaxial contact	Shell sizes 08 to 24	Male		M39029/76 424	RG 174; RG 179; RG 316				1.65	2.60
		Female		M39029/77 428						
12 Signal contact	Shell sizes 08 to 24	Male	2.40	8599-0705 MJ	1.91	3.18	14	12	2.46	3.61
		Female		8599-0709 900						
12 Coaxial contact	Shell sizes 08 to 24	Male		M39029/28 211	RG 174; RG 179; RG 316				2.40	2.60
		Female		M39029/75 416						
08 Power contact	Shell sizes 08 to 24	Male	3.64	8599-7544	-	8.98	-	8	4.50	6.50
		Female		8599-7541						
		Boot		8599-4542						
		Reductor *		8599-7645						
08 Coaxial contact	Shell sizes 08 to 24	Male		M39029/59 366	RG 188A/U				-	2.80
		Female		M39029/60 367						
		Boot		8590-4571						
08 Triaxial contact	Shell sizes 08 to 24	Male		M39029/90-529	MIL-C17/176 00002; FILECA F2703/14 RAYCHEM CHEMINAX 10612; FILOTEX M 17/176 00002				3.15	3.40
		Female		M39029/91-530						
		Boot		8590-4571						
04 Power contact (see p.34)	Shell sizes 08 to 24	Male	5.75	8599-7520A 900	7	10	According to wire used			
		Female		8599-7521A 900						
		Boot		8599-4590						
		Reductor **		8400-2351A						
		Male		8599-7520A 900	4	16				
		Female		8599-7521A 900						
		Boot		8599-4591						

* Reductor must be used for wire 8 mm²
** Reductor must be used for wire 8 & 10 mm²

Note: All dimensions are in millimeters (mm)

© 2013 - SOURIAU

Contacts

PCB contacts

Contact size	Shell size & layouts	Contact type	Contact Ø	Part numbers
22D	Shell size 02	Male	0.76	8599 1031-JJ
		Female		8599 1032-900
	Shell size 06	Male	0.76	F1P1P3E-0002AJJ
		Female		F1P1ES3-2202A00
	Shell sizes 08 to 24 shell type 2 only	Male	0.76	F1P1P3E-0001ALY
		Female		F1P1ES3-2201A00
26	Shell size 02	Male	0.50	8599 1004-JL
		Female		8599 1005-900
	Shell sizes 08 to 24 shell type 2 only	Male	1.03	F1P1P3E0020ALY
		Female		F1P1ES32001A00

Note: All dimensions are in millimeters (mm)

© 2013 - SOURIAU

Tooling

Crimp contacts
8TA Series & 8STA Series size 02, 04 & 06

Contact size	Wire size	Shell size & layout	Contact type	Locator part number		Tool part number	
				Spec.	SOURIAU	Spec.	SOURIAU
22D	22 to 28	02-35 04-35 06-35 08-35 (8TA only)	Male	M22520/2-09	8476-09	M22520/2-01	8476-01
			Female	M22520/2-06	8476-06		
26	24 to 30	06-05	Male	-	8599-0048		
			Female		8599-0049		
		04-05	Male	-	8599-0050		
			Female		8599-0051		
		02-05 04-06 06-09	Male	-	640 088		
			Female		640 089		

Crimp contacts
8STA Series size 08 to 24

Contact size	Contact type	Pliers						
		M22520/1-01		M22520/2-01		M300BT	M22520/23-01 (pneumatic plier)	
		Turret Part number		Locator Part number		Locator Part number	Die Part number	Locator Part number
		Spec.	SOURIAU	Spec.	SOURIAU	Spec.	Spec.	Spec.
26 High Density	Male	-	-	-	8599-0397	-	-	-
	Female				8599-0398			
22D	Male	-	-	M22520/2-09	8476-09	-	-	-
	Female			M22520/2-07	8476-07			
20	Male	M22520/1-04	8365-04	M22520/2-10	8476-10	-	-	-
	Female							
16	Male			-	-	-	-	-
	Female							
12	Male			-	-	-	-	-
	Female							
8	Male	-	-	-	-	-	M22520/23-02	8599-9601
	Female							
4	Male Female	-	-	-	-	-	M22520/23-04	M22520/23-11

M22520/1-01 + M22520/1-04

M22520/2-01
+ M22520/2-09 & M22520/2-07

M22520/23-01

© 2013 - SOURIAU

Tooling

Wire stripping

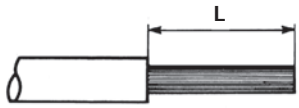

Contact size	26	22D	20	16	12	8	4
L (mm)	4		6			12	

Insertion & extraction tools

Contact size	Material	Part numbers		Colour	
		Specification	SOURIAU	Insertion	Extraction
26 Shell sizes 02 to 06	Plastic	-	8599-0444 900	Blue	Red
26 Shell sizes 08 to 24	Plastic	-	8599-0399 900	Black	White
22D	Plastic	M81969/14-01	-	Green	White
20	Plastic	M81969/14-10	-	Red	Orange
16	Plastic	M81969/14-03	-	Blue	White
12	Plastic	M81969/14-04	-	Yellow	
8	Plastic	M81969/14-06	-	-	Red
	Metallic	-	8660-197		-
4	Plastic	M81969/14-07	-	-	Blue
	Metallic	-	8533-8175		-

© 2013 - SOURIAU

Accessories

Filler plugs

Direction of insertion

Contact size	Part numbers		Colour
	Specification	SOURIAU	
22D	MS27488-22	8660-212	Black
20	MS27488-20	8522-389A	Red
16	MS27488-16	8522-390A	Blue
12	MS27488-12	8522-391A	Yellow

Not available for #26.

Boots

8STA Series

Shell size	Straight boot		90° boot	
	Raychem	Hellerman	Raychem	Hellerman
02	203W301-25-G02	1037-4-G	223W601-25	1182-4-G
04	204W221-25-G03	1037-4-G	224W221-25-G03	1182-4-G
06	204W221	1030-4-G	224W221	1181-4-G
08	202K121	152-42-G	222K121	1152-4-G
10	202K132	152-42-G	222K132	1152-4-G
12	202K142	154-42-G	222K142	1154-4-G
14	202K142	155-42-G	222K142	1155-4-G
16	202K153	156-42-G	222K153	1156-4-G
18	202K153	156-42-G	222K153	1156-4-G
20	202K163	157-43-G	222K163	1157-4-G
22	202K163	157-43-G	222K163	1157-4-G
24	202K174	157-43-G	222K174	1157-4-G

8TA Series

Shell size	Straight boot		90° boot	
	Raychem	Hellerman	Raychem	Hellerman
08	202K121	152-42-G	222K121	1152-4-G

© 2013 - SOURIAU

Accessories

Shrinkable termination detail

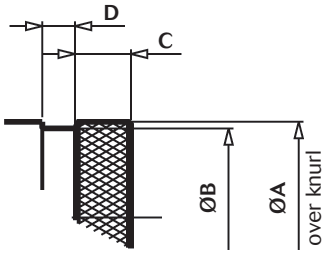

Shell size	02	04	06	08		10	12	14	16	18	20	22	24
				8TA	8STA								
ØA	7.20	8.65	9.90	8.65	10.62	13.72	17.26	20.41	23.6	26.76	29.93	33.11	36.3
ØB$^{\pm 0.05}$	6.55	8.00	9.25 - 9.40	8.00	9.70	12.65	16.02	19.00	22.23	25.22	28.37	31.86	34.67
C$^{\pm 0.05}$	2.20	2.70	4.20	2.70	6								
D	2.30	2.30	3.50	2.30	3.5								

Nut plates

- Nut plates are available for all 8STA (sizes 02 to 24) two holes flanges mounted connector receptacles.
- Their design was specially made for Motorsport market.

Shell size	P/N	T (Thread)
02	8STA-02 M25	M2.5
02	8STA-02 M20	M2
04	8STA-04	M2
04	8STA-04 M25	M2.5
06	8STA-06 M25	M2.5
08	8STA-08	M3
10	8STA-10	
12	8STA-12	
14	8STA-14	
16	8STA-16	
18	8STA-18	
20	8STA-20	
22	8STA-22	
24	8STA-24	

Gaskets

- Gaskets are available for all 8STA sizes (02 to 24)
- They are available in two versions:
  - Standard version: Liquid silicone rubber
  - Fuel tank version: Fluorel

Shell size	P/N Standard	P/N Fuel tank
02	8STA-G02	8STA-G02 022
04	8STA-G04	8STA-G04 022
06	8STA-G06	8STA-G06 022
08	8STA-G08	8STA-G08 022
10	8STA-G10	8STA-G10 022
12	8STA-G12	8STA-G12 022
14	8STA-G14	8STA-G14 022
16	8STA-G16	8STA-G16 022
18	8STA-G18	8STA-G18 022
20	8STA-G20	8STA-G20 022
22	8STA-G22	8STA-G22 022
24	8STA-G24	8STA-G24 022

Note: All dimensions are in millimeters (mm)

© 2013 - SOURIAU

Accessories

Plug metal protective cap & lanyard

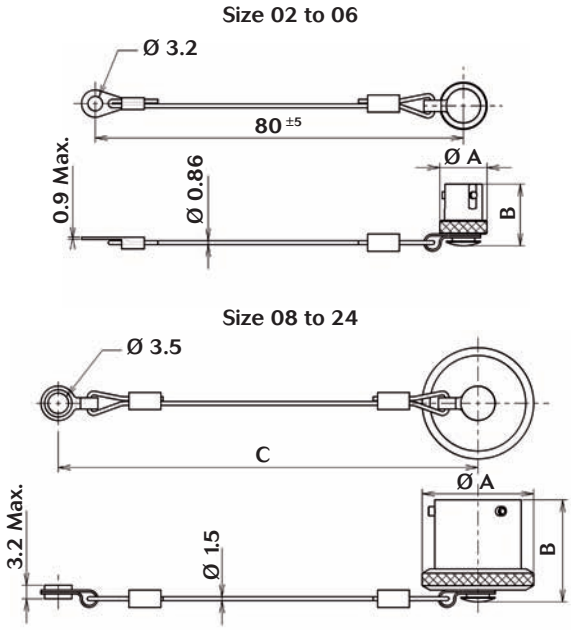

Part number	Size	Ø A Max.	B Max.	C ±5
8STA802A	02	10.60	13.20	-
8STA804A	04	12.20	13.80	-
8STA806A	06-05	15.10	14.00	-
8STA8F06A	06-35	15.10	14.00	-
8STA808A	08	17.50	27.44	128
8STA810A	10	20.50		128
8STA812A	12	24.50		140
8STA814A	14	27.50		140
8STA816A	16	30.90		140
8STA818A	18	34.00		140
8STA820A	20	37.20		153
8STA822A	22	40.40		153
8STA824A	24	43.50		153

Cord material: Nylon
Cap plating: Black anodic oxydation

Receptacle metal protective cap & lanyard

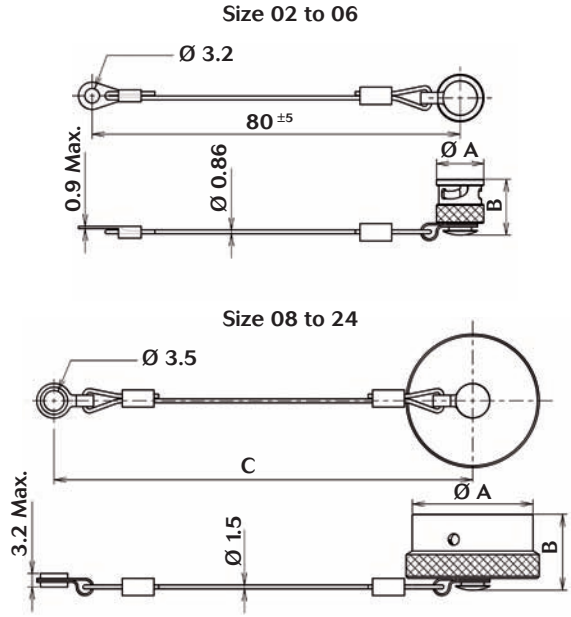

Part number	Size	Ø A Max.	B Max.	C ±5
8STA902A	02	10.60	13.20	-
8STA904A	04	13.50	13.80	-
8STA906A	06-05	15.10	14.00	-
8STA9F06A	06-35	15.10	14.00	-
8STA908A	08	19.05	21.44	128
8STA910A	10	21.85		128
8STA912A	12	26.15		140
8STA914A	14	29.35		140
8STA916A	16	32.55		140
8STA918A	18	35.35		140
8STA920A	20	38.85		153
8STA922A	22	42.05		153
8STA924A	24	45.15	22.22	153

Cord material: Nylon
Cap plating: Black anodic oxydation

Note: All dimensions are in millimeters (mm)

© 2013 - SOURIAU

Accessories

Metal protective cap

Plug cap
Type 8

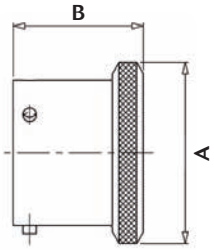

Receptacle cap
Type 9

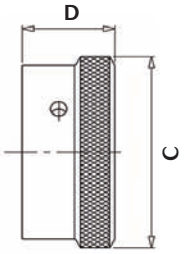

Cap design may vary according to shell size.

Shell size		Part numbers		Dimensions			
		Plug cap	Receptacle cap	Plug cap		Receptacle cap	
				ØA Max.	B Max.	ØC Max.	D Max.
02		8STA802	8STA902	10.60	11.20	10.60	9.80
04		8STA804	8STA904	12.20	10.80	13.50	10.80
06		8STA8F06	8STA9F06	15.10	11.00	15.10	13.00
08	8TA	8TA808	8TA908	-	-	-	-
	8STA	8STA808	8STA908	17.50	21.00	19.00	14.20
10		8STA810	8STA910	20.50		21.80	
12		8STA812	8STA912	24.50		26.10	
14		8STA814	8STA914	27.70		29.30	
16		8STA816	8STA916	30.90		32.50	15.00
18		8STA818	8STA918	34.00		35.30	
20		8STA820	8STA920	37.20		38.80	
22		8STA822	8STA922	40.40		42.00	
24		8STA824	8STA924	43.50		45.10	15.85

Note: All dimensions are in millimeters (mm)

© 2013 - SOURIAU

8STA Series

8STA/8TA Series

Range Extension

209 Series 64

High power contact 64

micro38999: 8BA Series 65

Composite connectors 65

*micro*Comp® Series 66

UTS Series 66

Products Range Extension

209 Series

Terminal Blocks for Power Distribution. Distribution of electrical current for aircraft equipment.

Versatility:
. The terminal blocks allow connection from 1 to 12 terminals.
. A shunt can link the terminals.

Easy to install:
. Screw mounting.
. Covers are available to electrically and mechanically protect the connections.

Flight proven:
. Used on major Airbus programs: A300, A320, A321, A319, A330, A340, A318, A380.

Airbus qualified:
. NSA 937903 / 937904 / 937905 / 937906.
. ASNE 0421 / 0467.

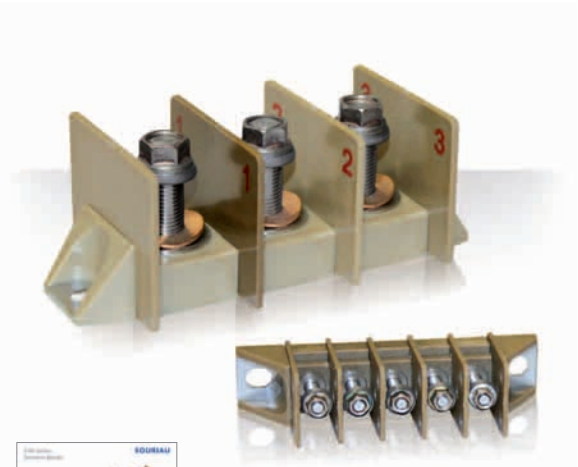

See «209 Series Terminal Blocks» product news on www.souriau.com

High Power Contact

38999 High Power (up to 850A). Designed to meet the harshest military requirement where high power and shielding are needed.

3 aluminum shell sizes available:
. Size 19 (450A max); size 23 (650A max); size 25 (850A max).
. Different finish: cadmium, zinc nickel, electroless nickel.
. Threaded coupling.

Superior contact technology equipped with a silver plated braid:
. High contact endurance.
. Low contact resistance.
. No microcut under vibration.

Modular design for easy installation:
. Removable backshell: straight, right angle or bus bar.
. Backshell termination: for thread or shrink boot.
. Possible to crimp various cable (Ø from 50 to 185mm).

Safety.

See «38999 Series III - High Power Contacts» product news on www.souriau.com

© 2013 - SOURIAU

Products Range Extension

Composite Connectors

SOURIAU leader on composite circular connectors. Denser and lighter than MIL-C-26500 and 852. Better performances compared to 38999 Series III at similar price.

Low weight:
. Up to 25% weight saving compared to aluminum.

High performance:
. According to D38999 (QPL approuved).
. 1500 hours salt spray.

Superior design:
. Match the latest lightning strike and 230V requirement.

See «8D Series - MIL-DTL-38999» catalog on www.souriau.com

micro38999 8BA Series

Miniature Product with a Break Away Release. Space saving with scoop proof connector for harsh and EMI applications.

A compact and high density solution:
. Diameter up to 45% smaller than size 9 (D38999).
. Up to 50% shorter.
. Integrated backshell: Cost and space saving.
. #26 & #22 contacts

Excellent features:
. Designed for D38999 requirements.
. IP67 sealing when mated.
. Ballseal (EMI).
. Stainless steel shell (1500 matings) & aluminum shell (500 matings).

RoHS and Cadmium free:
. Available in zinc nickel (RoHS) plating.
. Nickel and olive drab cadmium plating available.

See «micro38999, 8BA Break Away» product news on www.souriau.com

© 2013 - SOURIAU

Products Range Extension

*micro*Comp® Series

To respond to miniaturization and weight saving trends in aeronautical and defense applications SOURIAU has developed an innovative high density connector range.

Very light & high density:
- Shell in composite (or aluminum).
- Up to 66% lighter than HD D-Sub.
- Very high density up to 40% smaller than HD D-Sub.

Excellent features:
- With crimp removable contacts for wire AWG 24 to 28
- Temperature up to 175°C
- High vibration and shock withstanding
- Standard MIL-STD 83513 accessories
- Compatible with high speed data rates (Gigabit Ethernet...)

Quick connect version for harsh environment:
- 104 contacts push-push

See «*micro*Comp® Series - Miniature High Density» catalog on www.souriau.com

UTS Series

The UTS series is a plastic connector range but rugged enough to withstand industrial applications.

A wide range:
- Based on multiple power & signal connectors and offers everything from box mounted receptacles and cable mounted plugs to cable mounted in-line and PCB mounted receptacles.
- Almost all ways to accommodate wires exist: crimp, solder, screw termination.

A philosophy built around three key elements:
- Dynamic IP68/69K.
- UV Resistant.
- UL/IEC Compliant.

See «UTS Series» catalog on www.souriau.com

© 2013 - SOURIAU

SOURIAU

www.motorsport-connectors.com

contactmilaero@souriau.com

Esterline
Connection Technologies

© Copyright SOURIAU July 2013 - All information in this document presents only general particulars and shall not form part of any contract. All rights reserved to SOURIAU for changes without prior notification or public announcement. Any duplication is prohibited, unless approved in writing.